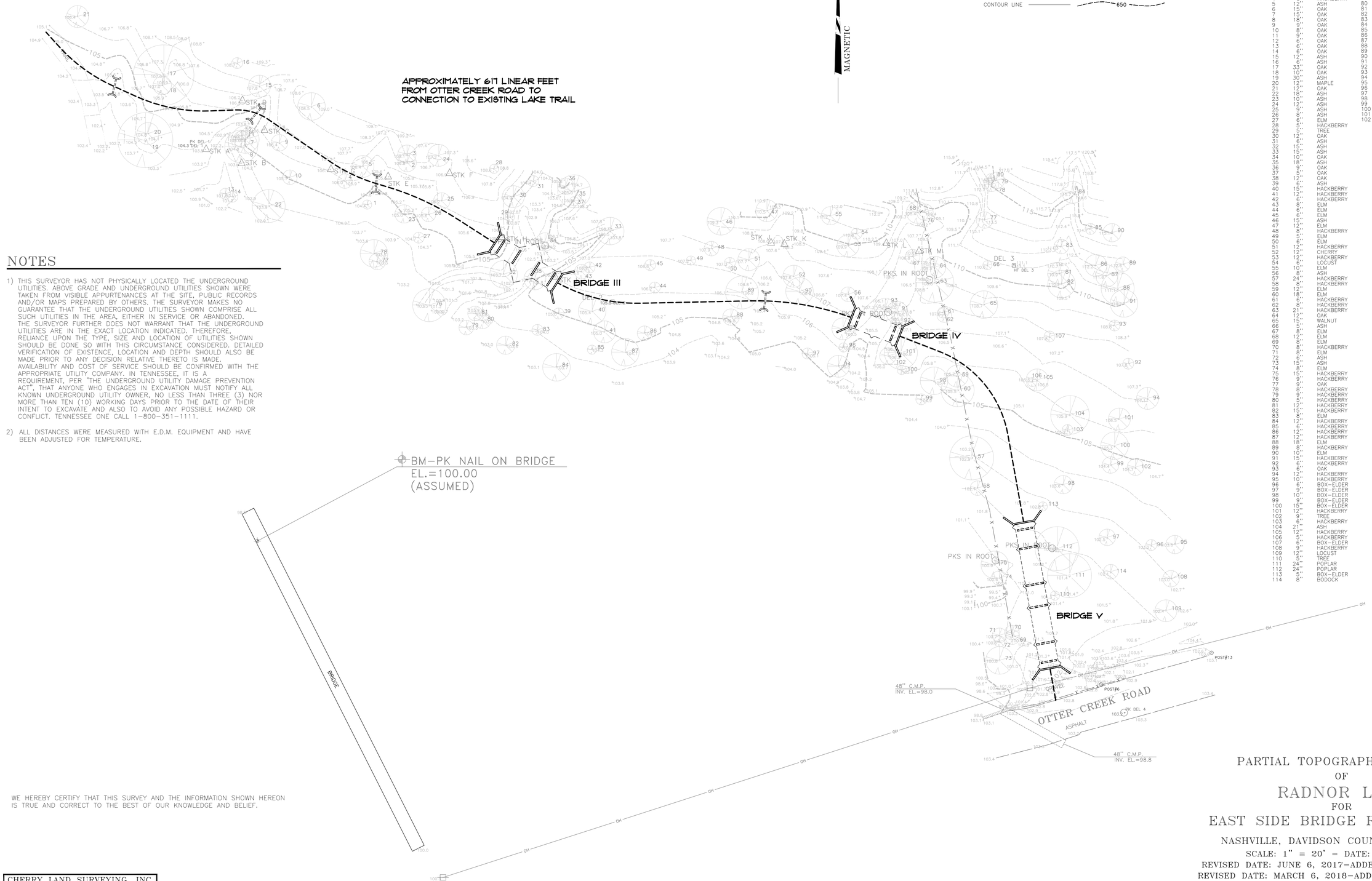

LEGEND

BENCHMARK
TREE
CONTOUR LINE — 650

NOTES

1) THIS SURVEYOR HAS NOT PHYSICALLY LOCATED THE UNDERGROUND UTILITIES. ABOVE GRADE AND UNDERGROUND UTILITIES SHOWN WERE TAKEN FROM VISIBLE APPURTENANCES AT THE SITE, PUBLIC RECORDS AND/OR MAPS PREPARED BY OTHERS. THE SURVEYOR MAKES NO GUARANTEE THAT THE UNDERGROUND UTILITIES SHOWN COMPRISE ALL SUCH UTILITIES IN THE AREA, EITHER IN SERVICE OR ABANDONED. THE SURVEYOR FURTHER DOES NOT WARRANT THAT THE UNDERGROUND UTILITIES ARE IN THE EXACT LOCATION INDICATED. THEREFORE, RELIANCE UPON THE TYPE, SIZE AND LOCATION OF UTILITIES SHOWN SHOULD BE DONE SO WITH THIS CIRCUMSTANCE CONSIDERED. DETAILED VERIFICATION OF EXISTENCE, LOCATION AND DEPTH SHOULD ALSO BE MADE PRIOR TO ANY DECISION RELATIVE THERETO IS MADE. AVAILABILITY AND COST OF SERVICE SHOULD BE CONFIRMED WITH THE APPROPRIATE UTILITY COMPANY. IN TENNESSEE, IT IS A REQUIREMENT, PER "THE UNDERGROUND UTILITY DAMAGE PREVENTION ACT", THAT ANYONE WHO ENGAGES IN EXCAVATION MUST NOTIFY ALL KNOWN UNDERGROUND UTILITY OWNER, NO LESS THAN THREE (3) NOR MORE THAN TEN (10) WORKING DAYS PRIOR TO THE DATE OF THEIR INTENT TO EXCAVATE AND ALSO TO AVOID ANY POSSIBLE HAZARD OR CONFLICT. TENNESSEE ONE CALL 1-800-351-1111.

2) ALL DISTANCES WERE MEASURED WITH E.D.M. EQUIPMENT AND HAVE BEEN ADJUSTED FOR TEMPERATURE.

TREE TABLE

NO.	SIZE	TYPE
1	5"	ASH
2	10"	ASH
3	10"	HACKBERRY
4	8"	HACKBERRY
5	12"	ASH
6	15"	OAK
7	15"	OAK
8	18"	OAK
9	9"	OAK
10	8"	OAK
11	9"	OAK
12	6"	OAK
13	6"	OAK
14	6"	OAK
15	12"	ASH
16	6"	ASH
17	33"	OAK
18	10"	OAK
19	30"	ASH
20	12"	MAPLE
21	12"	OAK
22	18"	ASH
23	11"	ASH
24	12"	ASH
25	9"	ASH
26	8"	ASH
27	6"	ELM
28	5"	HACKBERRY
29	5"	TREE
30	12"	OAK
31	6"	ASH
32	15"	ASH
33	15"	ASH
34	10"	OAK
35	18"	ASH
36	9"	OAK
37	5"	OAK
38	12"	OAK
39	6"	ASH
40	15"	HACKBERRY
41	12"	HACKBERRY
42	6"	HACKBERRY
43	8"	ELM
44	6"	ELM
45	6"	ELM
46	15"	ASH
47	12"	ELM
48	8"	HACKBERRY
49	5"	ELM
50	6"	ELM
51	12"	HACKBERRY
52	12"	CHERRY
53	12"	HACKBERRY
54	6"	LOCUST
55	10"	ELM
56	8"	ASH
57	24"	HACKBERRY
58	8"	HACKBERRY
59	12"	ELM
60	18"	ELM
61	6"	HACKBERRY
62	8"	HACKBERRY
63	21"	HACKBERRY
64	12"	OAK
65	15"	WALNUT
66	5"	ASH
67	8"	ELM
68	12"	ELM
69	8"	ELM
70	8"	HACKBERRY
71	8"	ELM
72	6"	ASH
73	15"	ASH
74	8"	ELM
75	15"	HACKBERRY
76	9"	HACKBERRY
77	9"	OAK
78	8"	HACKBERRY
79	9"	HACKBERRY
80	5"	HACKBERRY
81	12"	HACKBERRY
82	15"	HACKBERRY
83	8"	ELM
84	12"	HACKBERRY
85	6"	HACKBERRY
86	12"	HACKBERRY
87	12"	HACKBERRY
88	18"	ELM
89	8"	HACKBERRY
90	10"	ELM
91	15"	HACKBERRY
92	6"	HACKBERRY
93	6"	OAK
94	12"	HACKBERRY
95	10"	HACKBERRY
96	6"	BOX-ELDER
97	9"	BOX-ELDER
98	10"	BOX-ELDER
99	9"	BOX-ELDER
100	15"	BOX-ELDER
101	12"	HACKBERRY
102	9"	TREE
103	6"	HACKBERRY
104	21"	ASH
105	12"	HACKBERRY
106	5"	HACKBERRY
107	6"	BOX-ELDER
108	9"	HACKBERRY
109	12"	LOCUST
110	5"	TREE
111	24"	POPLAR
112	24"	POPLAR
113	5"	BOX-ELDER
114	8"	BODOCK

TREE TABLE

NO.	SIZE	TYPE
76	18"	ASH
77	9"	ASH
78	15"	ASH
79	8"	ELM
80	9"	ELM
81	8"	HACKBERRY
82	10"	ASH
83	6"	ELM
84	15"	ELM
85	5"	ASH
86	8"	ELM
87	15"	TREE
88	9"	ASH
89	18"	BODOCK
90	15"	HACKBERRY
91	12"	ASH
92	5"	ASH
93	12"	ASH
94	12"	ELM
95	12"	OAK
96	5"	HACKBERRY
97	6"	HACKBERRY
98	15"	HACKBERRY
99	6"	ASH
100	5"	OAK
101	18"	HACKBERRY
102	9"	OAK

WE HEREBY CERTIFY THAT THIS SURVEY AND THE INFORMATION SHOWN HEREON IS TRUE AND CORRECT TO THE BEST OF OUR KNOWLEDGE AND BELIEF.

CHERRY LAND SURVEYING, INC.
622 WEST IRIS DRIVE
NASHVILLE, TENNESSEE 37204
(615)269-3972 FAX:(615)269-9345
E-MAIL: cherryls@comcast.net

©

MICHAEL H. CHARETTE R.L.S. # 2048

PARTIAL TOPOGRAPHIC SURVEY
OF
RADNOR LAKE
FOR
EAST SIDE BRIDGE REPLACEMENT

NASHVILLE, DAVIDSON COUNTY, TENNESSEE

SCALE: 1" = 20' – DATE: MAY 8, 2017

REVISED DATE: JUNE 6, 2017–ADDED ADDITIONAL SURVEY

REVISED DATE: MARCH 6, 2018–ADDED ADDITIONAL SURVEY

20 0 10 20 40

GRAPHIC SCALE – 1" = 20'

JOB# 17069 MHC

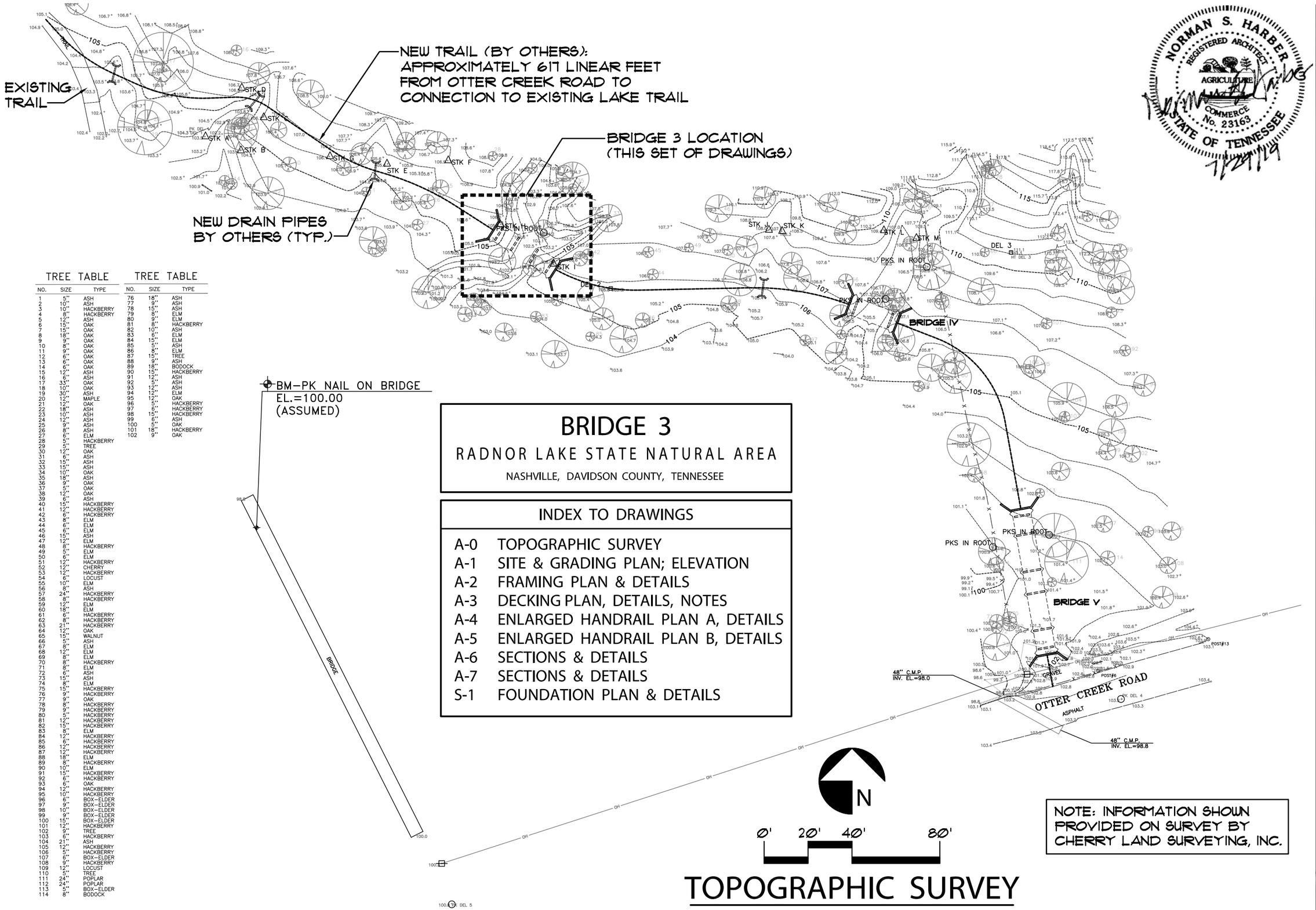

BRIDGE 3

RADNOR LAKE STATE NATURAL AREA

NASHVILLE, DAVIDSON COUNTY, TENNESSEE

INDEX TO DRAWINGS

A-0	TOPOGRAPHIC SURVEY
A-1	SITE & GRADING PLAN; ELEVATION
A-2	FRAMING PLAN & DETAILS
A-3	DECKING PLAN, DETAILS, NOTES
A-4	ENLARGED HANDRAIL PLAN A, DETAILS
A-5	ENLARGED HANDRAIL PLAN B, DETAILS
A-6	SECTIONS & DETAILS
A-7	SECTIONS & DETAILS
S-1	FOUNDATION PLAN & DETAILS

NOTE: INFORMATION SHOWN PROVIDED ON SURVEY BY CHERRY LAND SURVEYING, INC.

TOPOGRAPHIC SURVEY

TREE TABLE

NO.	SIZE	TYPE
1	5"	ASH
2	10"	ASH
3	10"	HACKBERRY
4	8"	HACKBERRY
5	12"	ASH
6	15"	OAK
7	15"	OAK
8	18"	OAK
9	9"	OAK
10	8"	OAK
11	9"	OAK
12	6"	OAK
13	6"	OAK
14	6"	OAK
15	12"	ASH
16	6"	ASH
17	33"	OAK
18	10"	OAK
19	30"	ASH
20	12"	MAPLE
21	12"	OAK
22	18"	ASH
23	10"	ASH
24	12"	ASH
25	9"	ASH
26	8"	ASH
27	6"	ELM
28	5"	HACKBERRY
29	5"	TREE
30	12"	OAK
31	6"	ASH
32	15"	ASH
33	15"	ASH
34	10"	OAK
35	18"	ASH
36	9"	OAK
37	5"	OAK
38	12"	OAK
39	6"	ASH
40	15"	HACKBERRY
41	12"	HACKBERRY
42	6"	HACKBERRY
43	8"	ELM
44	6"	ELM
45	6"	ELM
46	15"	ASH
47	12"	ELM
48	8"	HACKBERRY
49	5"	ELM
50	6"	ELM
51	12"	HACKBERRY
52	12"	CHERRY
53	12"	HACKBERRY
54	6"	LOCUST
55	10"	ELM
56	8"	ASH
57	24"	HACKBERRY
58	8"	HACKBERRY
59	12"	ELM
60	18"	ELM
61	6"	HACKBERRY
62	8"	HACKBERRY
63	21"	HACKBERRY
64	12"	OAK
65	15"	WALNUT
66	5"	ASH
67	8"	ELM
68	12"	ELM
69	8"	ELM
70	8"	HACKBERRY
71	8"	ELM
72	6"	ASH
73	15"	ASH
74	8"	ELM
75	15"	HACKBERRY
76	9"	HACKBERRY
77	9"	OAK
78	8"	HACKBERRY
79	9"	HACKBERRY
80	5"	HACKBERRY
81	12"	HACKBERRY
82	15"	HACKBERRY
83	8"	ELM
84	12"	HACKBERRY
85	6"	HACKBERRY
86	12"	HACKBERRY
87	12"	HACKBERRY
88	18"	ELM
89	8"	HACKBERRY
90	10"	ELM
91	15"	HACKBERRY
92	6"	HACKBERRY
93	6"	OAK
94	12"	HACKBERRY
95	10"	HACKBERRY
96	6"	BOX-ELDER
97	9"	BOX-ELDER
98	10"	BOX-ELDER
99	9"	BOX-ELDER
100	15"	BOX-ELDER
101	12"	HACKBERRY
102	9"	TREE
103	6"	HACKBERRY
104	21"	ASH
105	12"	HACKBERRY
106	5"	HACKBERRY
107	6"	BOX-ELDER
108	9"	HACKBERRY
109	12"	LOCUST
110	5"	TREE
111	24"	POPLAR
112	24"	POPLAR
113	5"	BOX-ELDER
114	8"	BODOCK

TREE TABLE

NO.	SIZE	TYPE
76	18"	ASH
77	9"	ASH
78	15"	ASH
79	8"	ELM
80	9"	ELM
81	8"	HACKBERRY
82	10"	ASH
83	6"	ELM
84	15"	ELM
85	5"	ASH
86	8"	ELM
87	15"	TREE
88	9"	ASH
89	18"	BODOCK
90	15"	HACKBERRY
91	12"	ASH
92	5"	ASH
93	12"	ASH
94	12"	ELM
95	12"	OAK
96	5"	HACKBERRY
97	6"	HACKBERRY
98	15"	HACKBERRY
99	6"	ASH
100	5"	OAK
101	18"	HACKBERRY
102	9"	OAK

NORMAN S. HARBER
REGISTERED ARCHITECT
AGRICULTURE
COMMERCE
No. 23163
STATE OF TENNESSEE
7/29/19

Harber Architecture, Inc.
1303 Springfield Hwy, Goodlettsville, TN 37072
Phone: 615-497-5043 Email: normharber@gmail.com

ISSUE DATE: 5/4/18

REVISIONS: 1 7/29/19

LAKE TRAIL BRIDGE 3
RADNOR LAKE STATE NATURAL AREA
NASHVILLE, DAVIDSON COUNTY, TENNESSEE

SHEET NUMBER
A-0

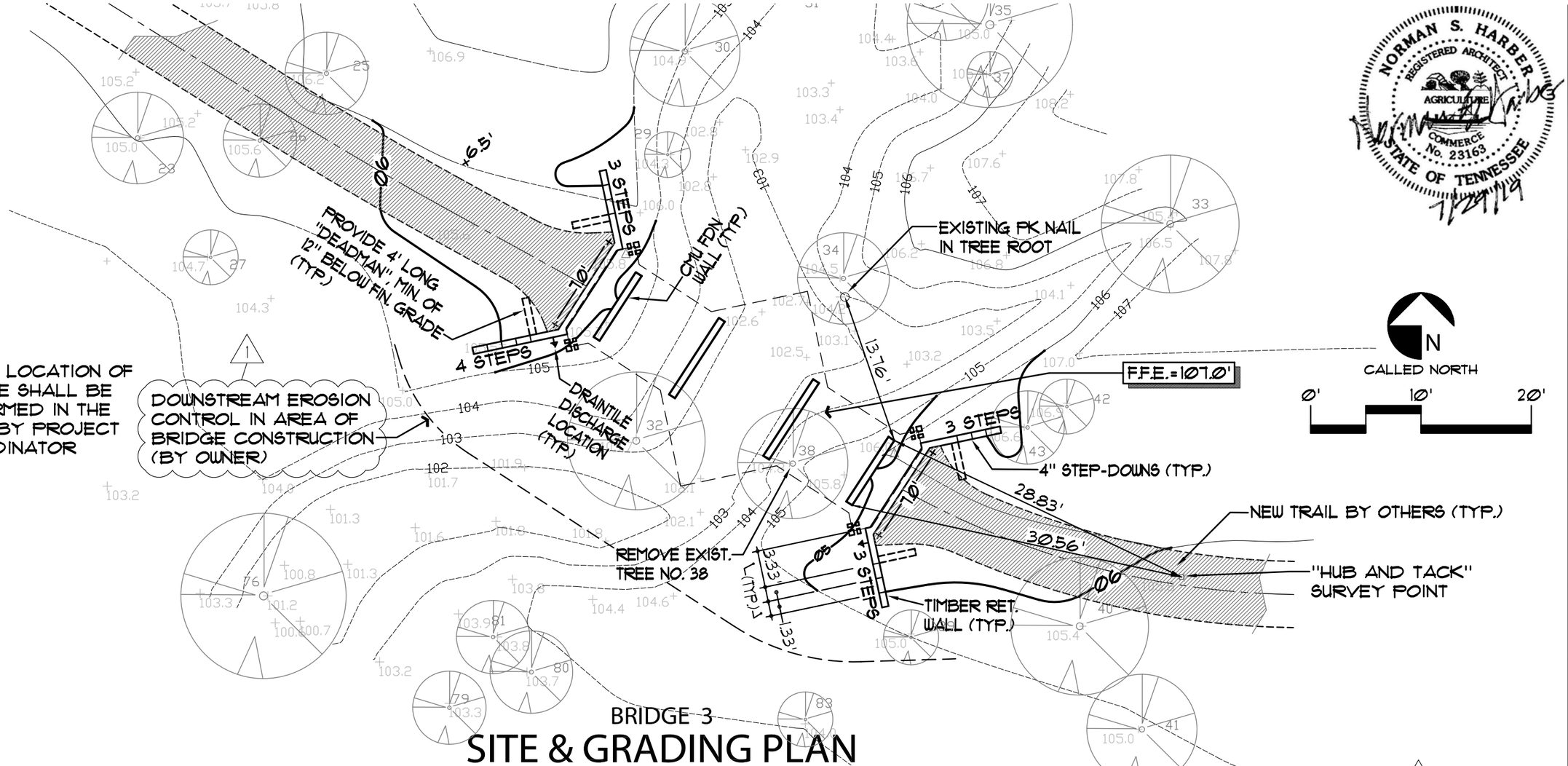

BRIDGE 3

SITE & GRADING PLAN

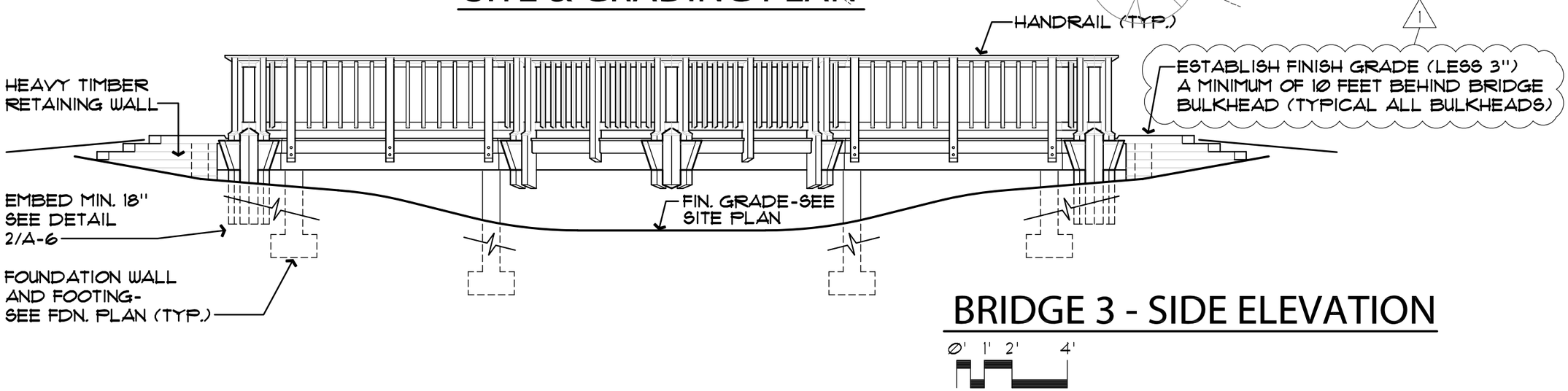

BRIDGE 3 - SIDE ELEVATION

NORMAN S. HARBER
REGISTERED ARCHITECT
AGRICULTURE
COMMERCE
No. 23163
STATE OF TENNESSEE
7/29/19

Harber Architecture, Inc.
1303 Springfield Hwy, Goodlettsville, TN 37072
Phone: 615 - 497 - 5043 Email: normharber@gmail.com

ISSUE DATE: 5 / 4 / 18

REVISIONS: 1 7 / 29 / 19

LAKE TRAIL BRIDGE 3
RADNOR LAKE STATE NATURAL AREA
NASHVILLE, DAVIDSON COUNTY, TENNESSEE

SHEET NUMBER
A-1

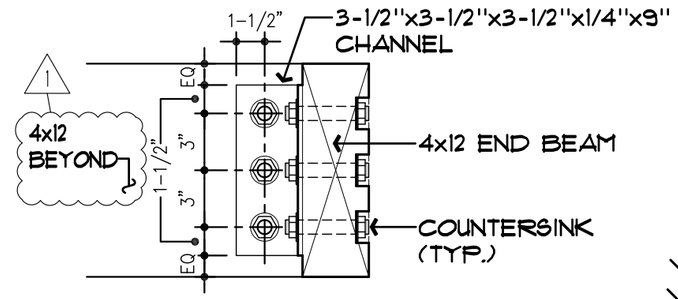

DETAIL 1

SCALE : 1-1/2" = 1'-0"

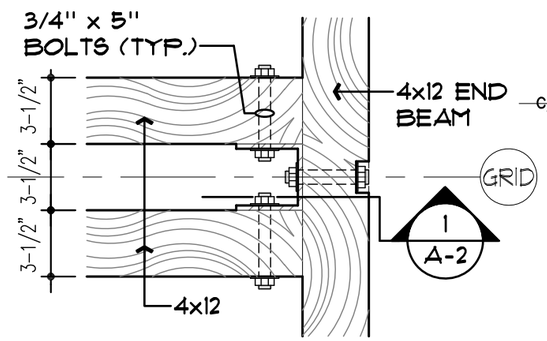

DETAIL 2

SCALE : 1-1/2" = 1'-0"

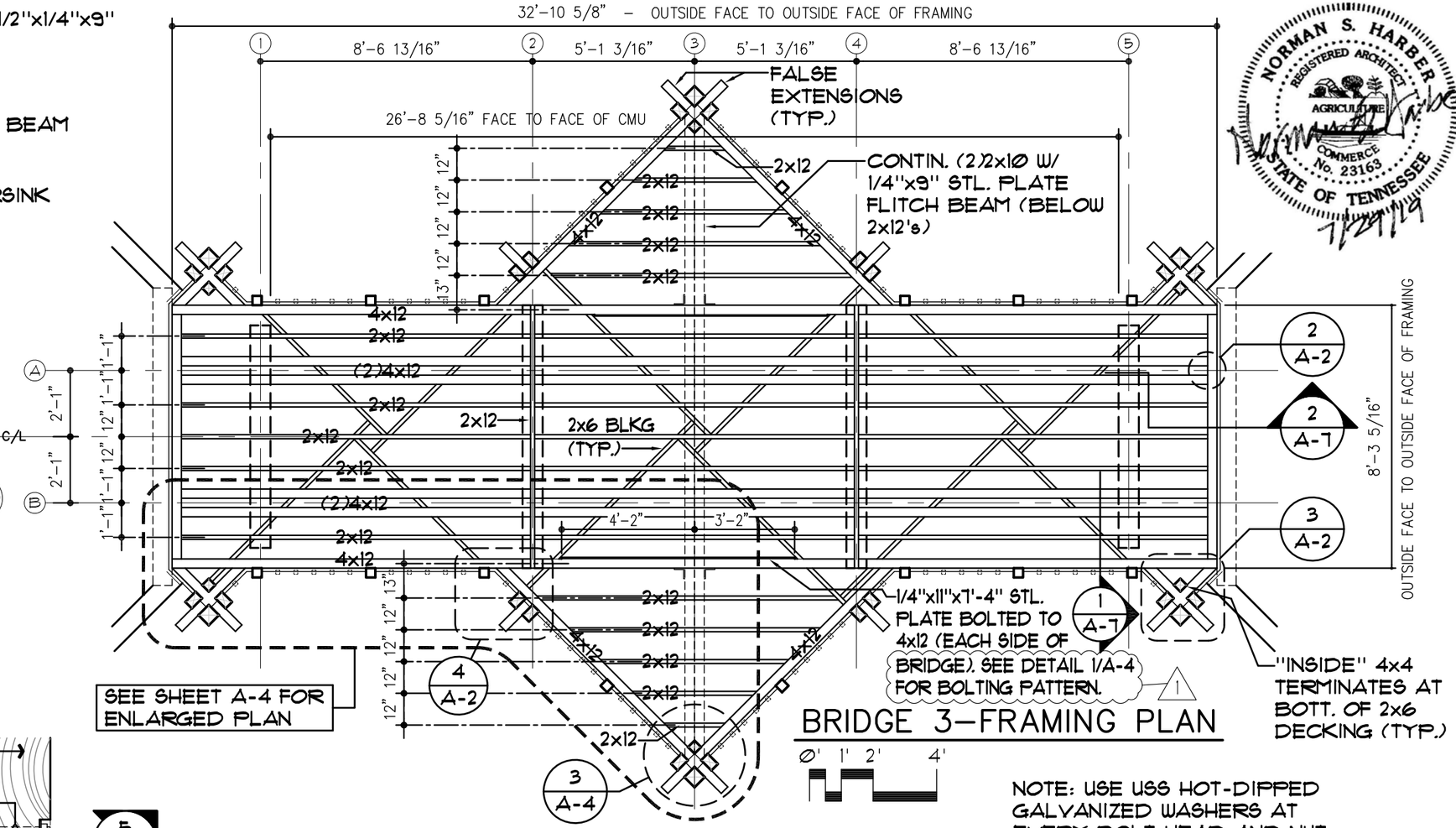

BRIDGE 3–FRAMING PLAN

Ø' 1' 2' 4'

NOTE: USE USS HOT-DIPPED GALVANIZED WASHERS AT EVERY BOLT HEAD AND NUT. USE USS HOT-DIPPED 1/4" STEEL PLATE AT FLITCH BEAMS.

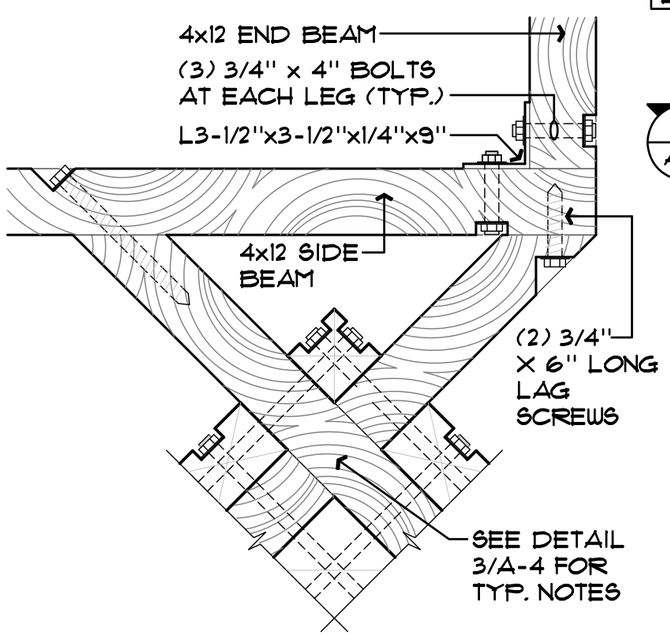

DETAIL 3

SCALE : 1-1/2" = 1'-0"

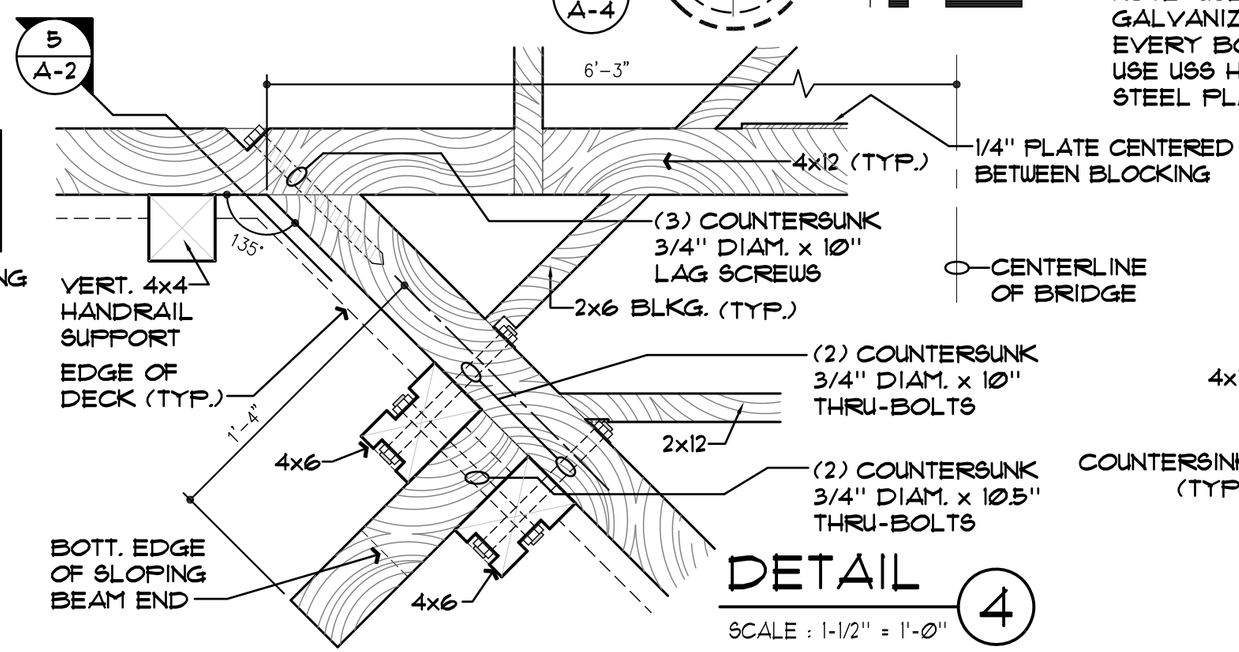

DETAIL 4

SCALE : 1-1/2" = 1'-0"

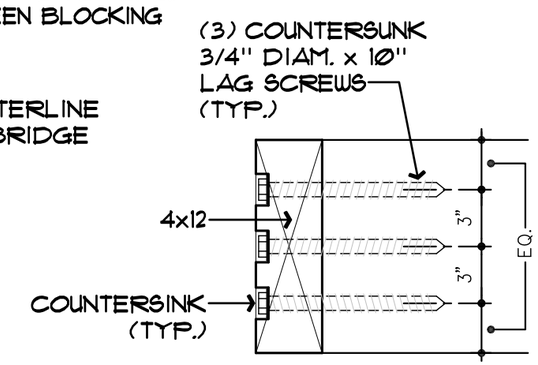

DETAIL 5

SCALE : 1-1/2" = 1'-0"

NORMAN S. HARBER
REGISTERED ARCHITECT
AGRICULTURE
COMMERCE
No. 23163
STATE OF TENNESSEE
7/29/19

Harber Architecture, Inc.
1303 Springfield Hwy, Goodlettsville, TN 37072
Phone: 615-497-5043 Email: normharber@gmail.com

ISSUE DATE: 5/4/18

REVISIONS: 1 7/29/19

LAKE TRAIL BRIDGE 3
RADNOR LAKE STATE NATURAL AREA
NASHVILLE, DAVIDSON COUNTY, TENNESSEE

SHEET NUMBER
A-2

GENERAL NOTES

Fastener Requirements:

All specified bolts, washers, nuts, steel angles, and steel plates shall be hot dipped galvanized. Washers shall be used at every interface with wood members except at the head of carriage bolts. 1

All connections for wood members shall be made with bolts or screws except 1 x 6 perimeter trim may be nailed with 8d galvanized ring shank nails. Appropriate length galvanized nails may be used in concealed locations as necessary to "set" members in place prior to making the permanent connection.

Concealed screws used in the floor framing system and subfloor shall be either stainless steel or Grip Rite (or equal) PrimeGuard Plus Green screws. Exposed screws on face of bridge, handrails and benches shall be Headcoat stainless steel trim head screws with Brown #34 colored heads (or approved equal). Length of the screw shall be appropriate for the application.

Retaining wall timbers shall be secured with seven inch long Headlok (or equal) flathead fasteners.

Stain Requirements:

All wood, including floor framing, shall be stained with PPG Flood Semi-Transparent Alkyd/Oil Stain (FLD802). Color formula is: B-2Y+12:C-44:F-1Y+6. "Cut" ends of wood members shall be stained prior to installation. 1

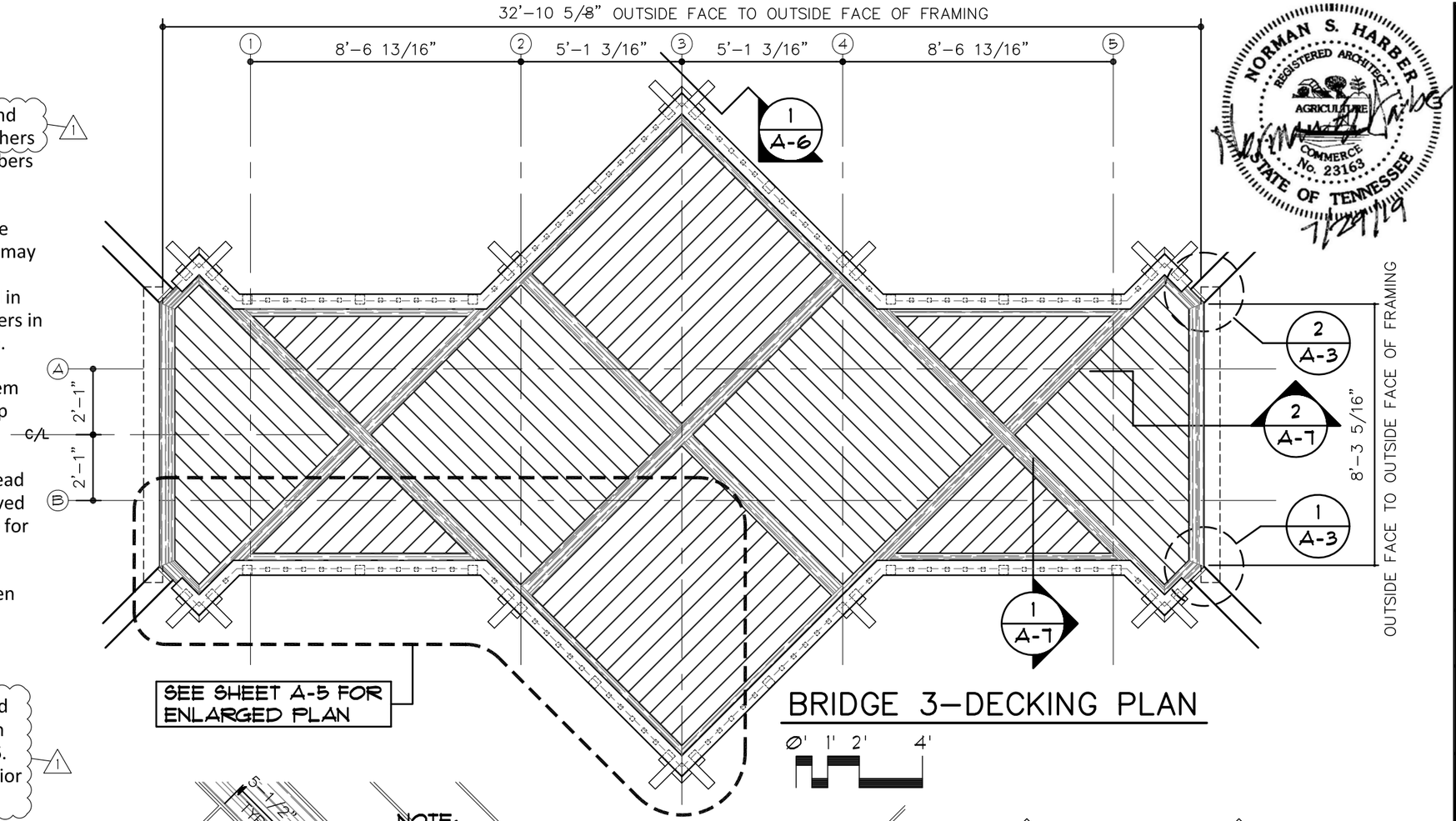

BRIDGE 3–DECKING PLAN

0' 1' 2' 4'

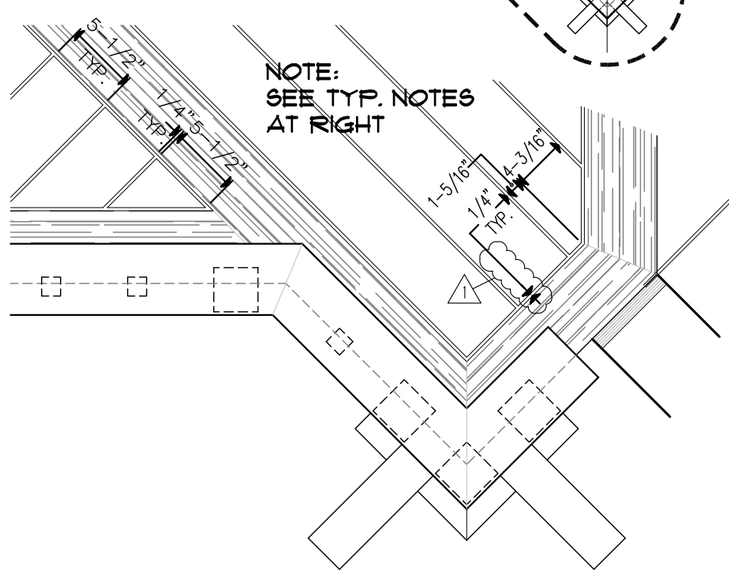

DETAIL 1

SCALE : 1" = 1'-0"

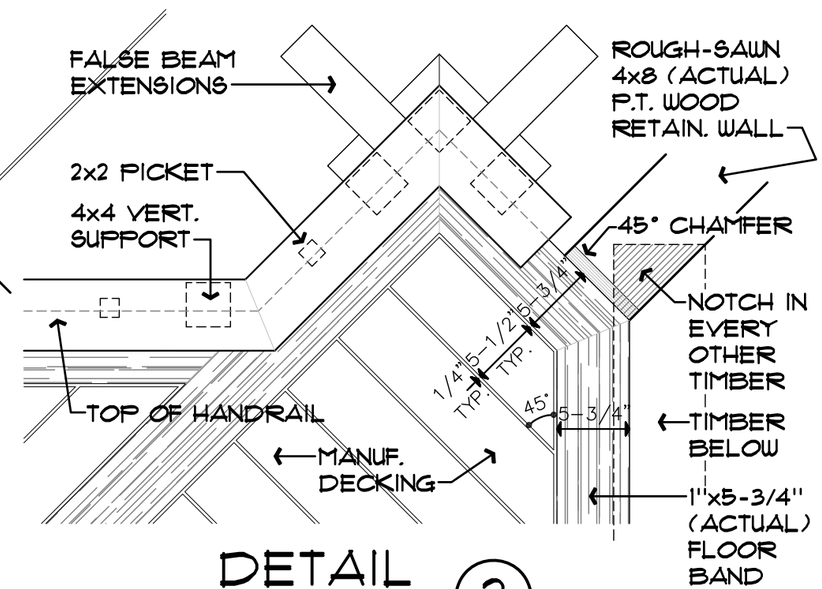

DETAIL 2

SCALE : 1" = 1'-0"

LUMBER SCHEDULE

NOMINAL SIZE	ACTUAL SIZE	SQUARE EDGE	1/8" RAD. EDGE	3/16" RAD. EDGE	FINISH DRESSED	ROUGH-SAWN	LOCATION
4x12	3-1/2" x 11-1/4"		●		●		
4x4	3-1/2" x 3-1/2"		●		●		
2x12	1-1/2" x 11-1/4"	●			●		
2X10	1-1/2" x 9-1/4"	●			●		
2x8	1-1/2" x 7-1/4"	●			●		
2x6	1-1/2" x 5-1/2"	●			●		
2x5	1-1/2" x 5"	●			●		SUBFLOOR
2x4	1-1/2" x 3-1/2"	●			●		
2x4	1-1/2" x 3-1/2"		●		●		HANDRAILS
2x2	1-1/2" x 1-1/2"		●		●		
1x6 1	7/8" x 5-3/4"			●	●		FLR. DECK/HANDRAILS
1x8	3/4" x 7-1/4"	●			●		POST CAPS
1x6	3/4" x 5-1/2"	●			●		PERIMETER TRIM
4x8	4" x 8"	●				●	RETAINING WALLS

NOTE: ALL LUMBER TO BE NO. 2 SOUTHERN YELLOW PINE (OR BETTER), PRESSURE-TREATED TO .60 PCF (OR BETTER)

NORMAN S. HARBER
REGISTERED ARCHITECT
AGRICULTURE
COMMERCE
No. 23163
STATE OF TENNESSEE
7/29/19

Harber Architecture, Inc.
1303 Springfield Hwy, Goodlettsville, TN 37072
Phone: 615-497-5043 Email: normharber@gmail.com

ISSUE DATE: 5/4/18

REVISIONS: 1 7/29/19

LAKE TRAIL BRIDGE 3
RADNOR LAKE STATE NATURAL AREA
NASHVILLE, DAVIDSON COUNTY, TENNESSEE

SHEET NUMBER
A-3

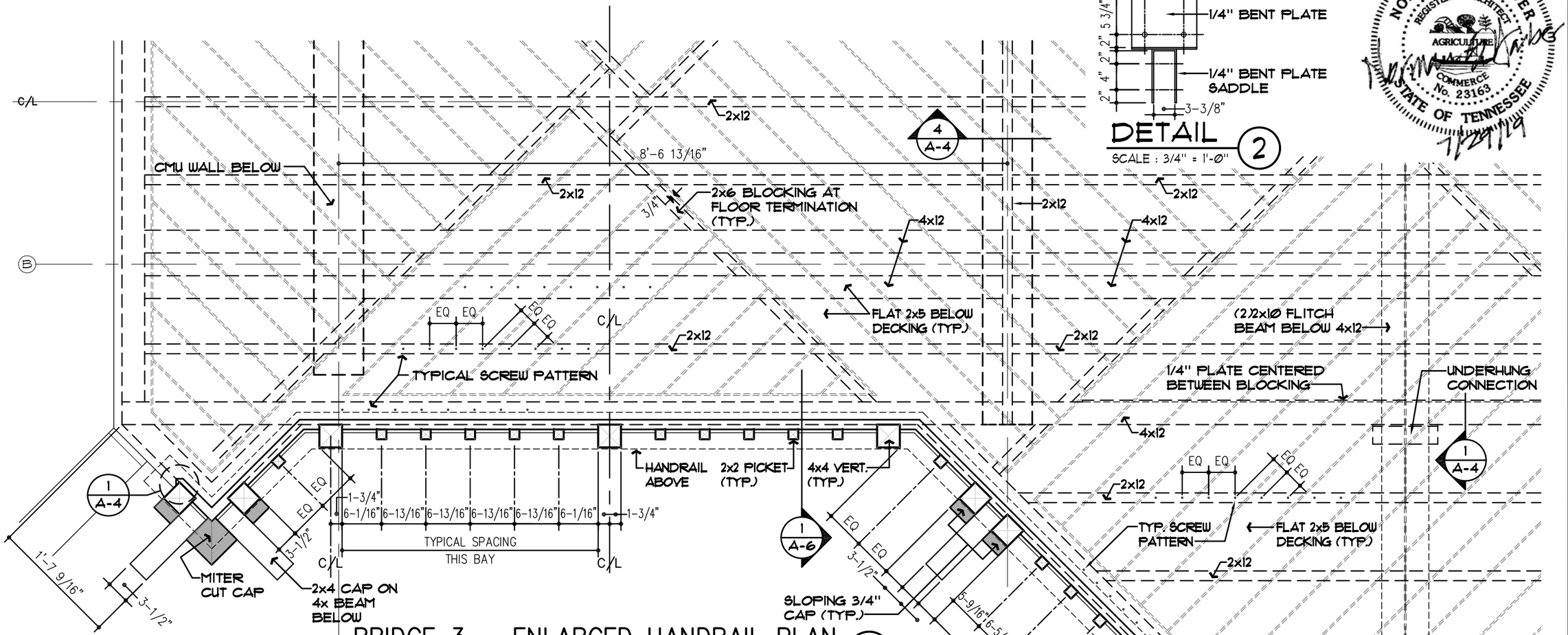

BRIDGE 3 – ENLARGED HANDRAIL PLAN (A)

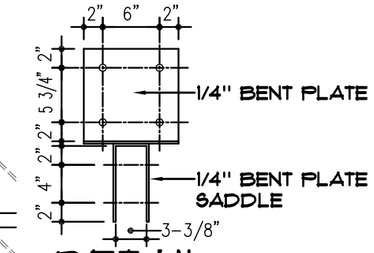

DETAIL (2)

SCALE : 3/4" = 1'-0"

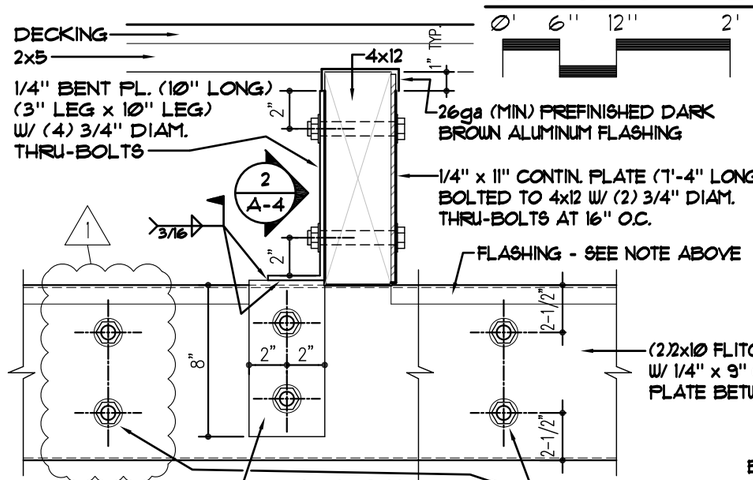

DETAIL (1)

SCALE : 1-1/2" = 1'-0"

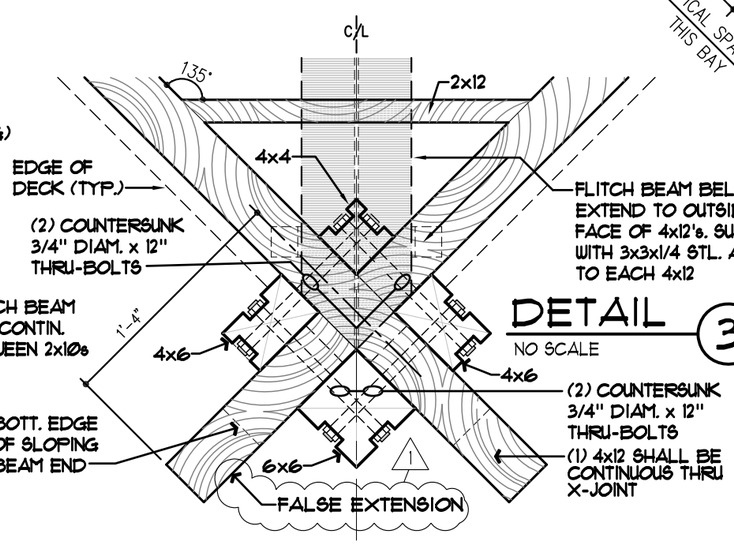

DETAIL (3)

NO SCALE

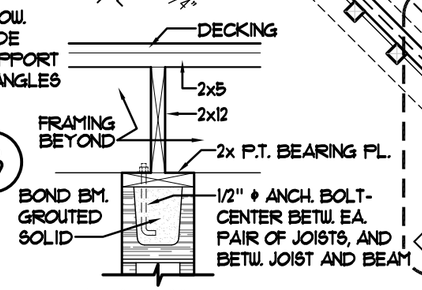

DETAIL (4)

NO SCALE

NORMAN S. HARBER
REGISTERED ARCHITECT
AGRICULTURE
COMMERCE
No. 23163
STATE OF TENNESSEE
7/29/19

Harber Architecture, Inc.
1303 Springfield Hwy, Goodlettsville, TN 37072
Phone: 615-497-5043 Email: normharber@gmail.com

ISSUE DATE: 5/4/18

REVISIONS: 1 7/29/19

LAKE TRAIL BRIDGE 3
RADNOR LAKE STATE NATURAL AREA
NASHVILLE, DAVIDSON COUNTY, TENNESSEE

SHEET NUMBER
A-4

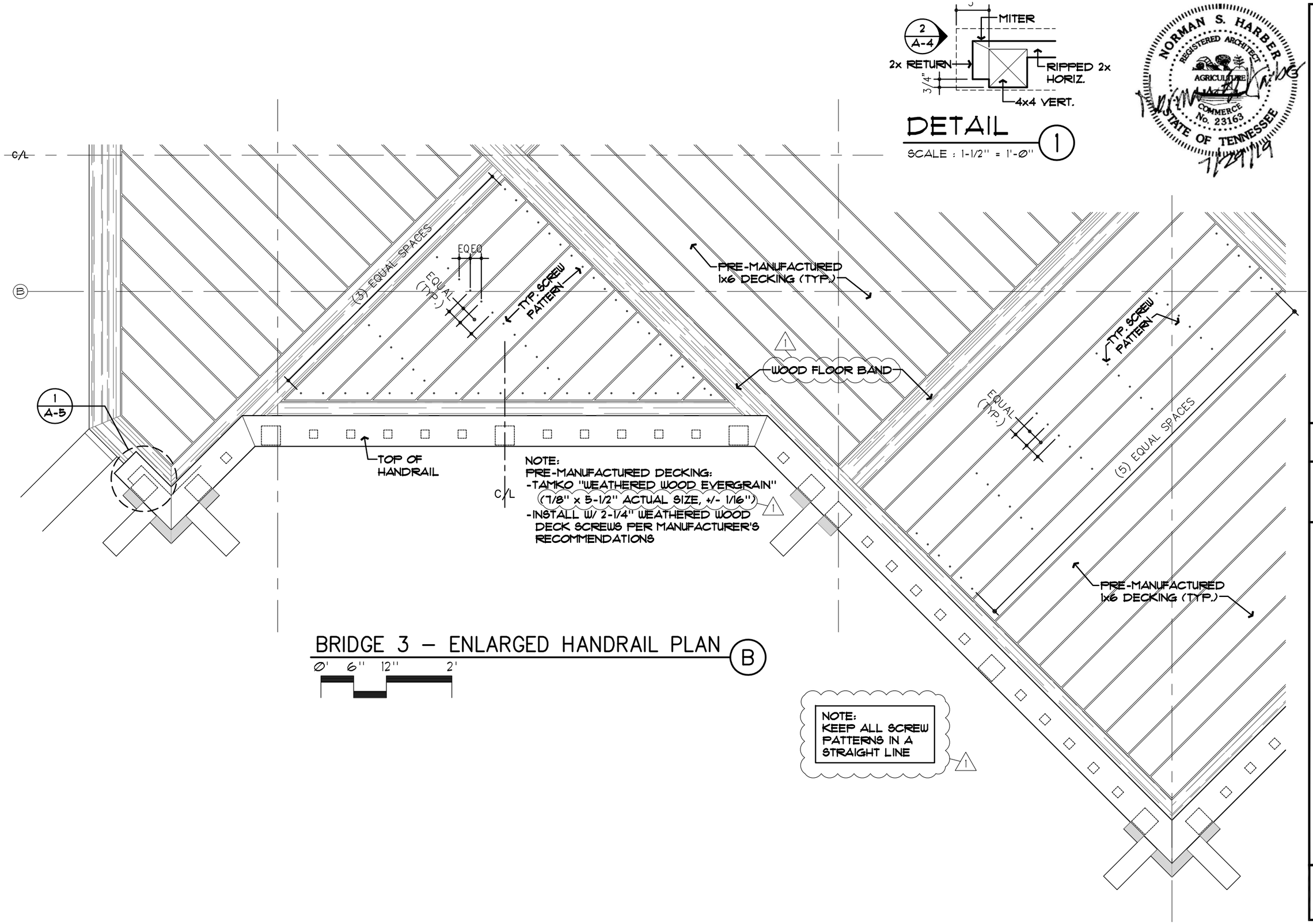

NORMAN S. HARBER
REGISTERED ARCHITECT
AGRICULTURE
COMMERCE
No. 23163
STATE OF TENNESSEE
7/29/19

Harber Architecture, Inc.
1303 Springfield Hwy, Goodlettsville, TN 37072
Phone: 615 - 497 - 5043 Email: normharber@gmail.com

ISSUE DATE : 5 / 4 / 18

REVISIONS : 1 7 / 29 / 19

LAKE TRAIL BRIDGE 3
RADNOR LAKE STATE NATURAL AREA
NASHVILLE, DAVIDSON COUNTY, TENNESSEE

SHEET NUMBER
A-5

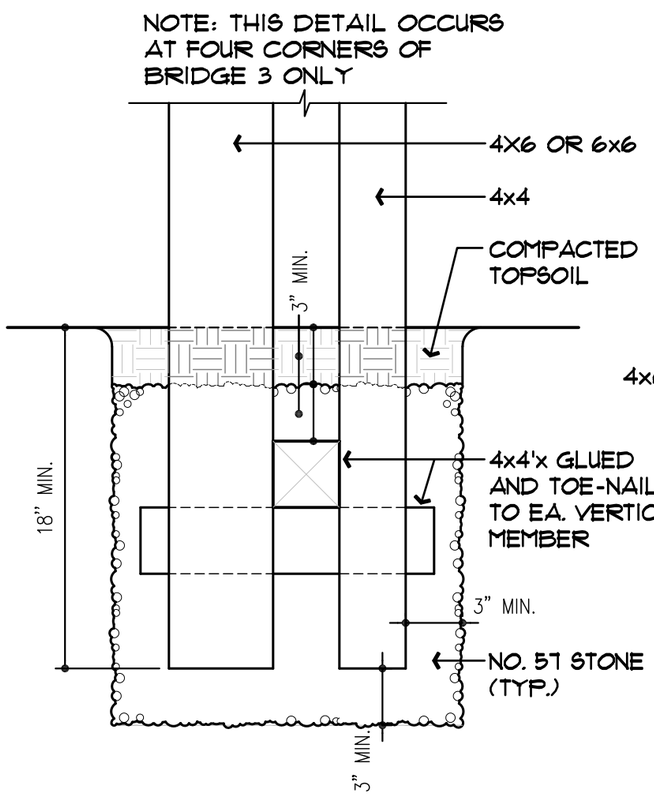

SECTION 2

SCALE : 1-1/2" = 1'-0"

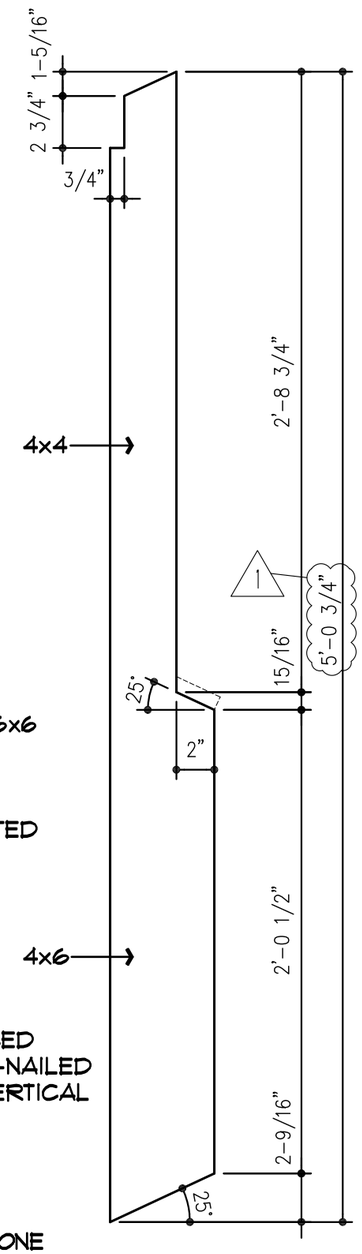

MILLED POST CENTER OF BRIDGE

PROFILE

SCALE : 1-1/2" = 1'-0"

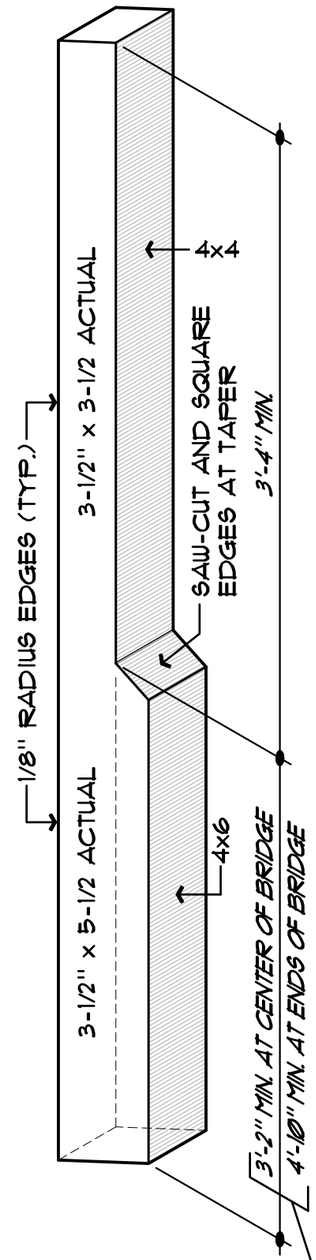

MILLED POST

ISOMETRIC

NO SCALE

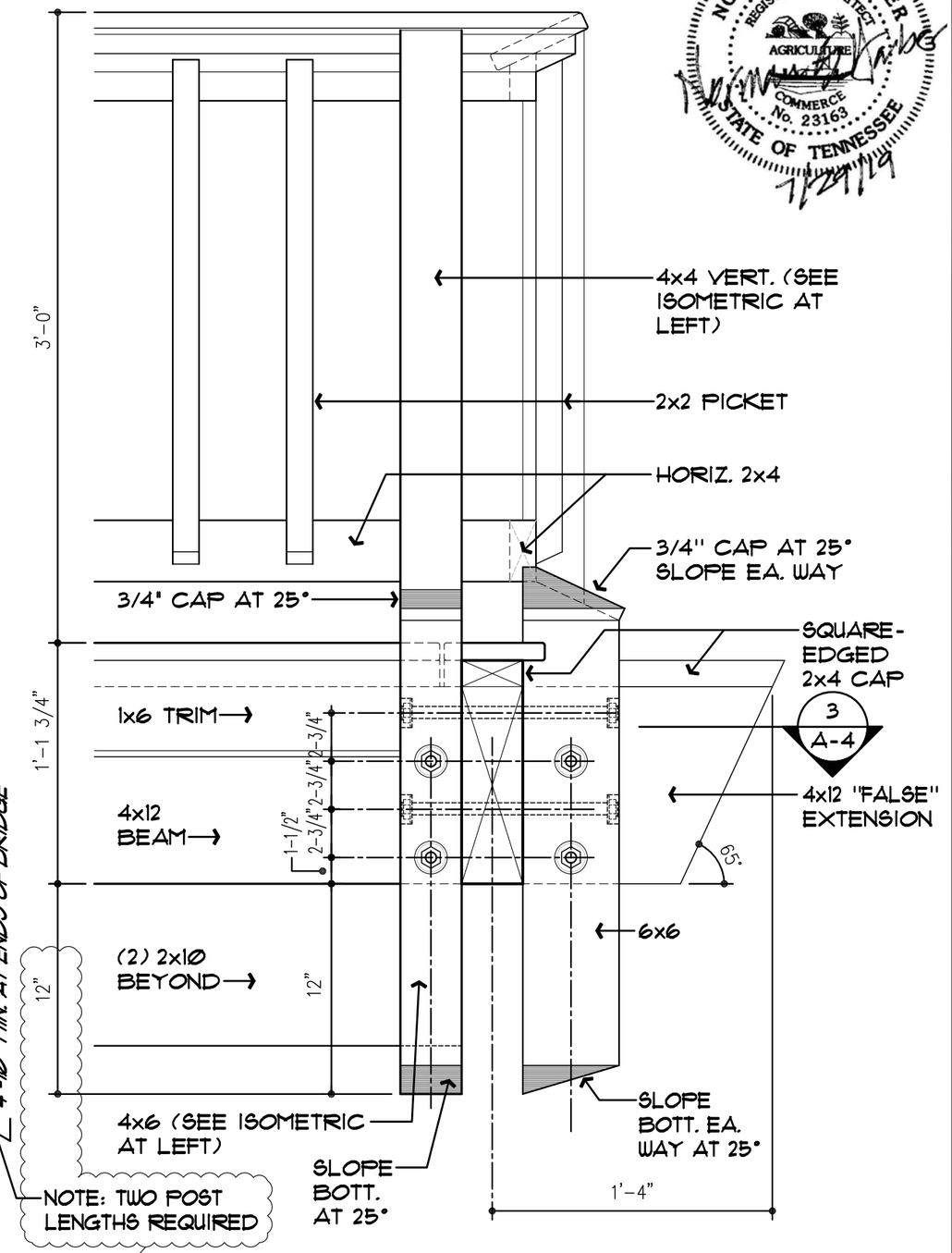

SECTION 1

SCALE : 1-1/2" = 1'-0"

NORMAN S. HARBER
REGISTERED ARCHITECT
AGRICULTURE
COMMERCE
No. 23163
STATE OF TENNESSEE
7/29/19

Harber Architecture, Inc.
1303 Springfield Hwy, Goodlettsville, TN 37072
Phone: 615-497-5043 Email: normharber@gmail.com

ISSUE DATE : 5/4/18

REVISIONS : 1 7/29/19

LAKE TRAIL BRIDGE 3
RADNOR LAKE STATE NATURAL AREA
NASHVILLE, DAVIDSON COUNTY, TENNESSEE

SHEET NUMBER
A-6

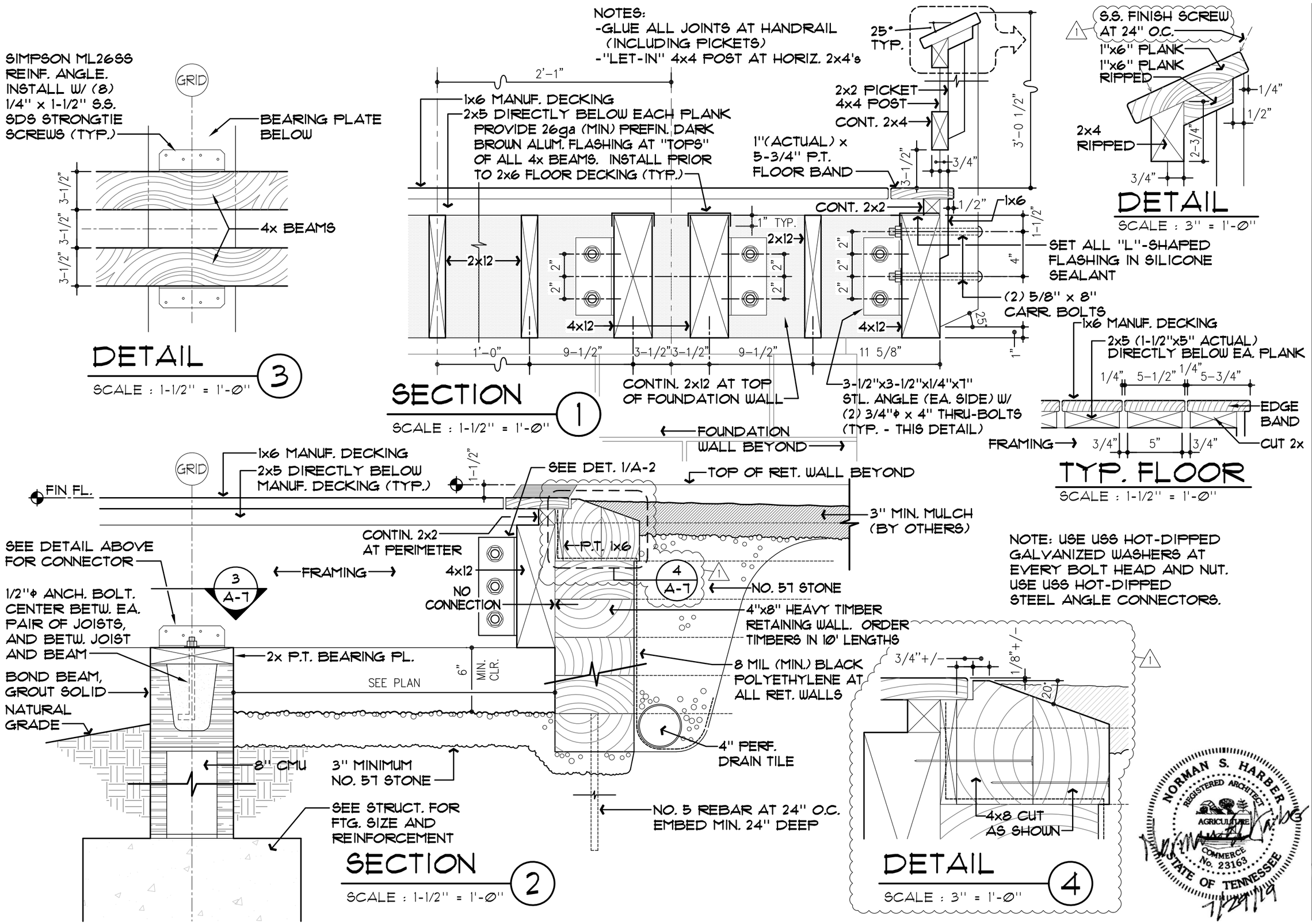

Harber Architecture, Inc.
1303 Springfield Hwy, Goodlettsville, TN 37072
Phone: 615-497-5043 Email: normharber@gmail.com

ISSUE DATE: 5/4/18

REVISIONS: 1 7/29/19

LAKE TRAIL BRIDGE 3
RADNOR LAKE STATE NATURAL AREA
NASHVILLE, DAVIDSON COUNTY, TENNESSEE

SHEET NUMBER
A-7

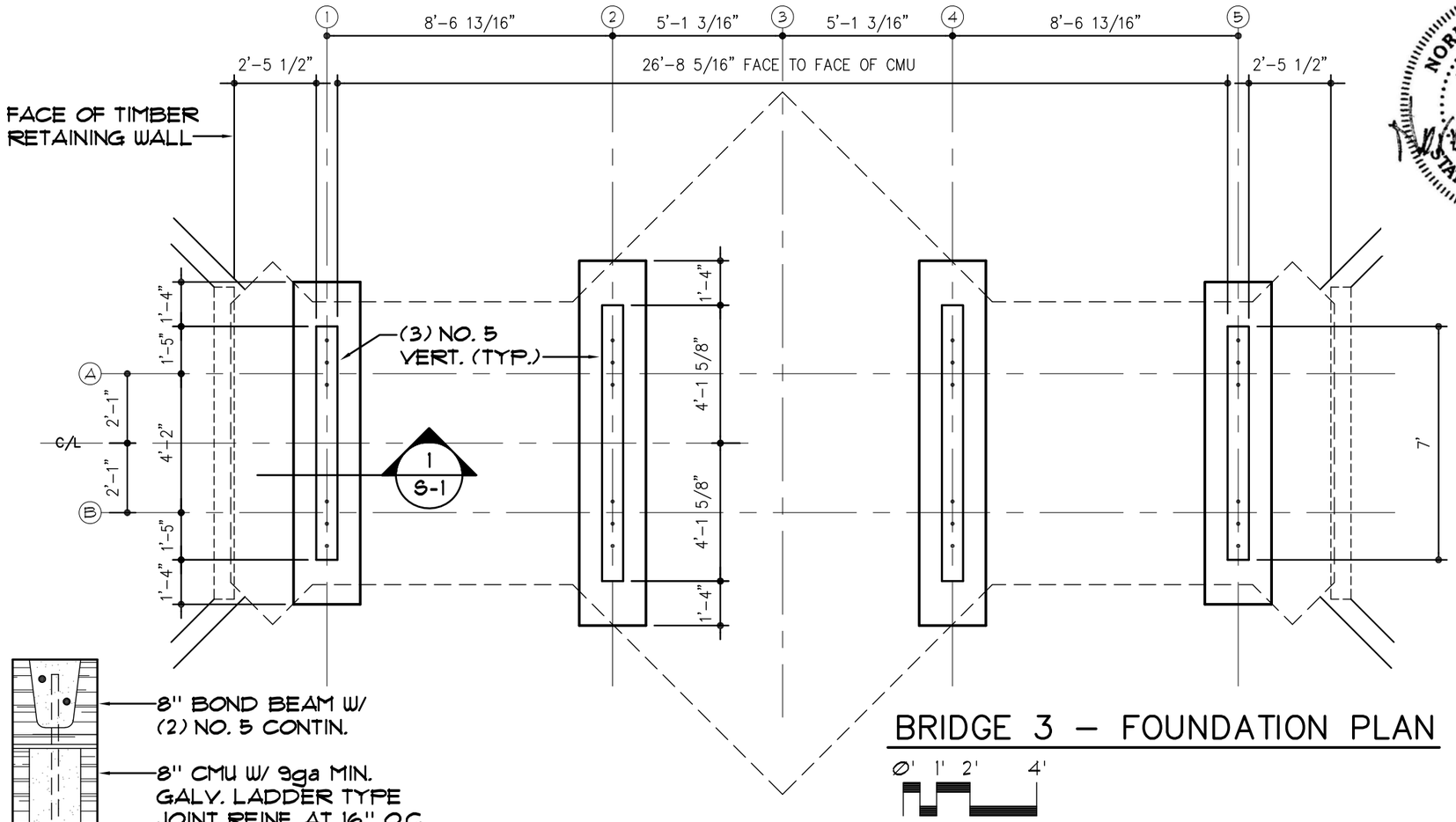

BRIDGE 3 – FOUNDATION PLAN

0' 1' 2' 4'

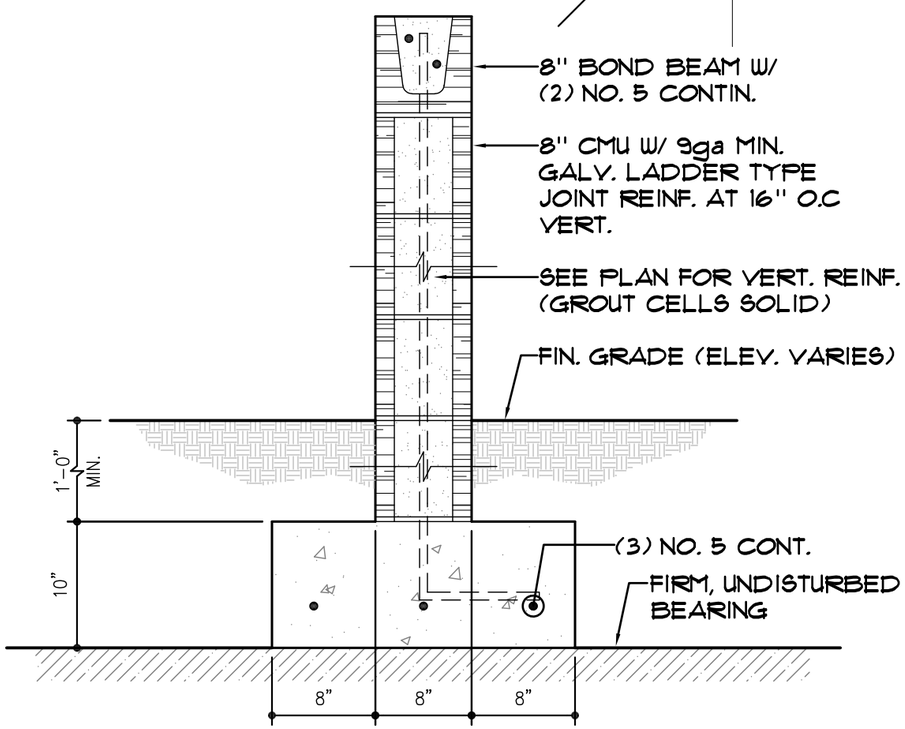

DETAIL 1

SCALE : 1" = 1'-0"

STRUCTURAL NOTES

CONCRETE

1. ALL CONCRETE SHALL HAVE A 28-DAY STRENGTH OF 3000 PSI.
2. ALL REINFORCEMENT BARS SHALL BE ASTM A-615, GRADE 60.
3. GROUT FOR FILLING CMU CELLS SHALL BE ASTM C-476 WITH A 28-DAY STRENGTH OF 3000 PSI.

DESIGN LOADS

1. LIVE LOAD = 100 PSF
2. VEHICLE LOAD = TOOLCAT 5600 WITH MAXIMUM WHEEL LOAD = 1800 LBS.

NORMAN S. HARBER
REGISTERED ARCHITECT
AGRICULTURE
COMMERCE
No. 23163
STATE OF TENNESSEE
7/29/19

Harber Architecture, Inc.
1303 Springfield Hwy, Goodlettsville, TN 37072
Phone : 615 - 497 - 5043 Email : normharber@gmail.com

ISSUE DATE : 5 / 4 / 18

REVISIONS : 1 7 / 29 / 19

LAKE TRAIL BRIDGE 3
RADNOR LAKE STATE NATURAL AREA
NASHVILLE, DAVIDSON COUNTY, TENNESSEE

SHEET NUMBER
S-1

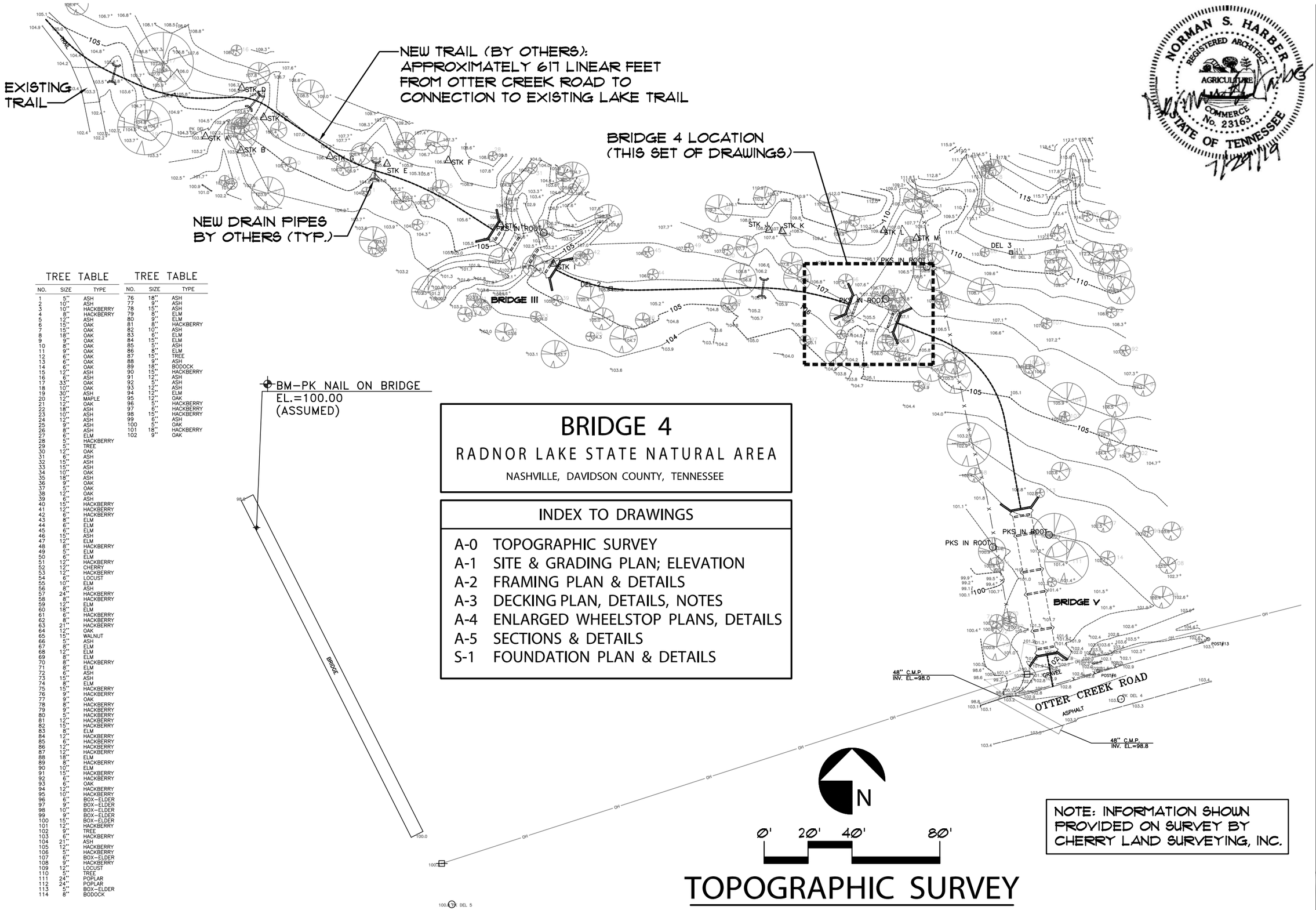

TREE TABLE		
NO.	SIZE	TYPE
1	5"	ASH
2	10"	ASH
3	10"	HACKBERRY
4	8"	HACKBERRY
5	12"	ASH
6	15"	OAK
7	15"	OAK
8	18"	OAK
9	9"	OAK
10	8"	OAK
11	9"	OAK
12	6"	OAK
13	6"	OAK
14	6"	OAK
15	12"	ASH
16	6"	ASH
17	33"	OAK
18	10"	OAK
19	30"	ASH
20	12"	MAPLE
21	12"	OAK
22	18"	ASH
23	10"	ASH
24	12"	ASH
25	9"	ASH
26	8"	ASH
27	6"	ELM
28	5"	HACKBERRY
29	5"	TREE
30	12"	OAK
31	6"	ASH
32	15"	ASH
33	15"	ASH
34	10"	OAK
35	18"	ASH
36	9"	OAK
37	5"	OAK
38	12"	OAK
39	6"	ASH
40	15"	HACKBERRY
41	12"	HACKBERRY
42	6"	HACKBERRY
43	8"	ELM
44	6"	ELM
45	6"	ELM
46	15"	ASH
47	12"	ELM
48	8"	HACKBERRY
49	5"	ELM
50	6"	ELM
51	12"	HACKBERRY
52	12"	CHERRY
53	12"	HACKBERRY
54	6"	LOCUST
55	10"	ELM
56	8"	ASH
57	24"	HACKBERRY
58	8"	HACKBERRY
59	12"	ELM
60	18"	ELM
61	6"	HACKBERRY
62	8"	HACKBERRY
63	21"	HACKBERRY
64	12"	OAK
65	15"	WALNUT
66	5"	ASH
67	8"	ELM
68	12"	ELM
69	8"	ELM
70	8"	HACKBERRY
71	8"	ELM
72	6"	ASH
73	15"	ASH
74	8"	ELM
75	15"	HACKBERRY
76	9"	HACKBERRY
77	9"	OAK
78	8"	HACKBERRY
79	9"	HACKBERRY
80	5"	HACKBERRY
81	12"	HACKBERRY
82	15"	HACKBERRY
83	8"	ELM
84	12"	HACKBERRY
85	6"	HACKBERRY
86	12"	HACKBERRY
87	12"	HACKBERRY
88	18"	ELM
89	8"	HACKBERRY
90	10"	ELM
91	15"	HACKBERRY
92	6"	HACKBERRY
93	6"	OAK
94	12"	HACKBERRY
95	10"	HACKBERRY
96	6"	BOX-ELDER
97	9"	BOX-ELDER
98	10"	BOX-ELDER
99	9"	BOX-ELDER
100	15"	BOX-ELDER
101	12"	HACKBERRY
102	9"	TREE
103	6"	HACKBERRY
104	21"	ASH
105	12"	HACKBERRY
106	5"	HACKBERRY
107	6"	BOX-ELDER
108	9"	HACKBERRY
109	12"	LOCUST
110	5"	TREE
111	24"	POPLAR
112	24"	POPLAR
113	5"	BOX-ELDER
114	8"	BODOCK

TREE TABLE		
NO.	SIZE	TYPE
76	18"	ASH
77	9"	ASH
78	15"	ASH
79	8"	ELM
80	9"	ELM
81	8"	HACKBERRY
82	10"	ASH
83	6"	ELM
84	15"	ELM
85	5"	ASH
86	8"	ELM
87	15"	TREE
88	9"	ASH
89	18"	BODOCK
90	15"	HACKBERRY
91	12"	ASH
92	5"	ASH
93	12"	ASH
94	12"	ELM
95	12"	OAK
96	5"	HACKBERRY
97	6"	HACKBERRY
98	15"	HACKBERRY
99	6"	ASH
100	5"	OAK
101	18"	HACKBERRY
102	9"	OAK

BRIDGE 4

RADNOR LAKE STATE NATURAL AREA

NASHVILLE, DAVIDSON COUNTY, TENNESSEE

INDEX TO DRAWINGS

A-0 TOPOGRAPHIC SURVEY
A-1 SITE & GRADING PLAN; ELEVATION
A-2 FRAMING PLAN & DETAILS
A-3 DECKING PLAN, DETAILS, NOTES
A-4 ENLARGED WHEELSTOP PLANS, DETAILS
A-5 SECTIONS & DETAILS
S-1 FOUNDATION PLAN & DETAILS

NOTE: INFORMATION SHOWN PROVIDED ON SURVEY BY CHERRY LAND SURVEYING, INC.

TOPOGRAPHIC SURVEY

NORMAN S. HARBER
REGISTERED ARCHITECT
AGRICULTURE
COMMERCE
No. 23163
STATE OF TENNESSEE
7/29/19

Harber Architecture, Inc.
1303 Springfield Hwy, Goodlettsville, TN 37072
Phone: 615-497-5043 Email: normharber@gmail.com

ISSUE DATE: 5/4/18

REVISIONS: 1 7/29/19

LAKE TRAIL BRIDGE 4
RADNOR LAKE STATE NATURAL AREA
NASHVILLE, DAVIDSON COUNTY, TENNESSEE

SHEET NUMBER
A-0

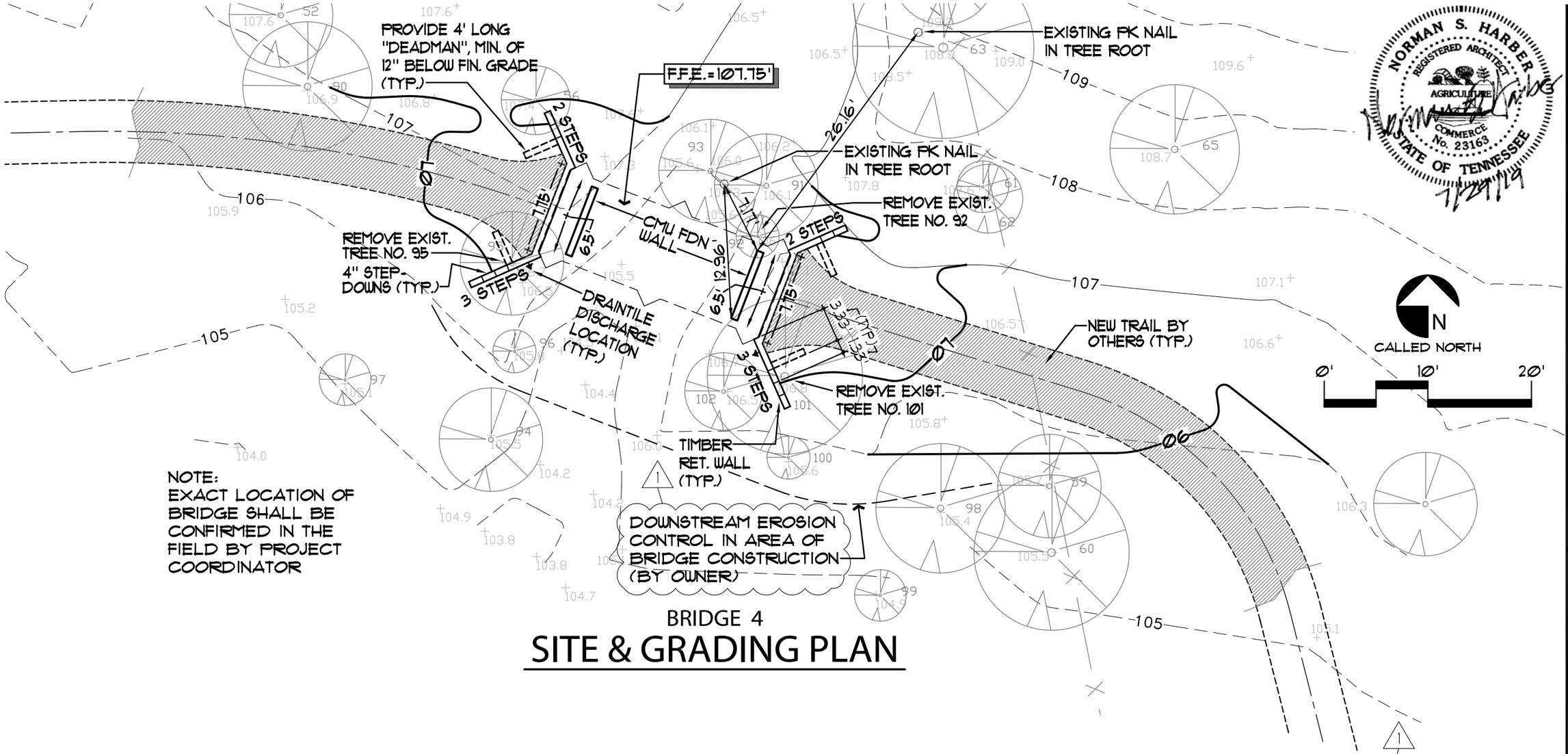

BRIDGE 4

SITE & GRADING PLAN

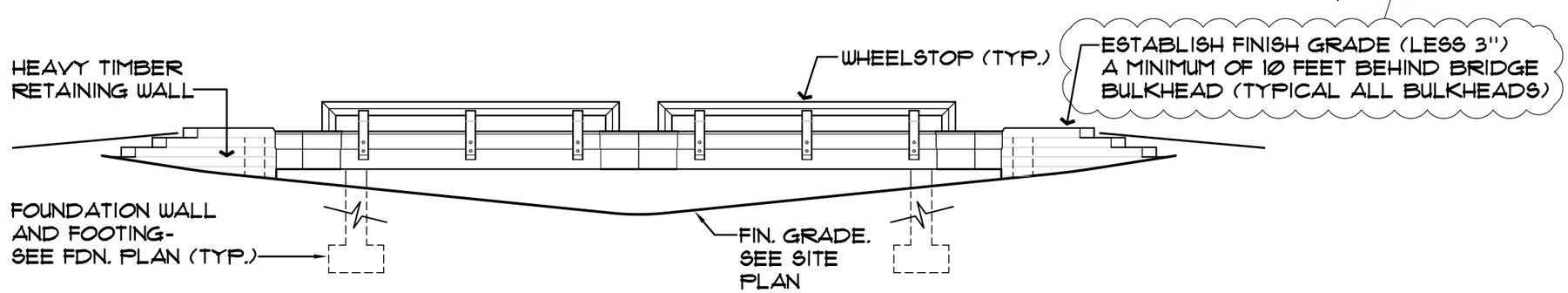

BRIDGE 4 - SIDE ELEVATION

0' 1' 2' 4'

NORMAN S. HARBER
REGISTERED ARCHITECT
AGRICULTURE COMMERCE
No. 23163
STATE OF TENNESSEE
7/29/19

Harber Architecture, Inc.
1303 Springfield Hwy, Goodlettsville, TN 37072
Phone: 615 - 497 - 5043 Email : normharber@gmail.com

ISSUE DATE : 5 / 4 / 18

REVISIONS : 1 7 / 29 / 19

LAKE TRAIL BRIDGE 4
RADNOR LAKE STATE NATURAL AREA
NASHVILLE, DAVIDSON COUNTY, TENNESSEE

SHEET NUMBER
A-1

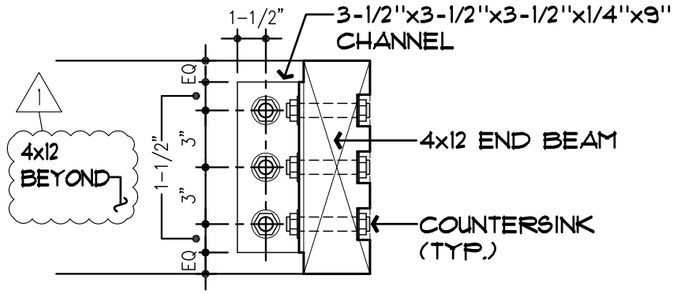

DETAIL 1

SCALE : 1-1/2" = 1'-0"

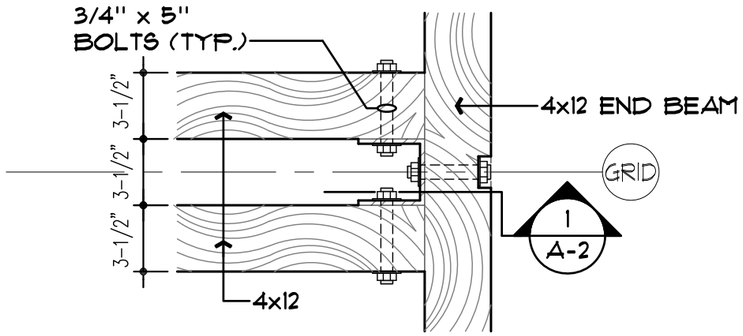

DETAIL 2

SCALE : 1-1/2" = 1'-0"

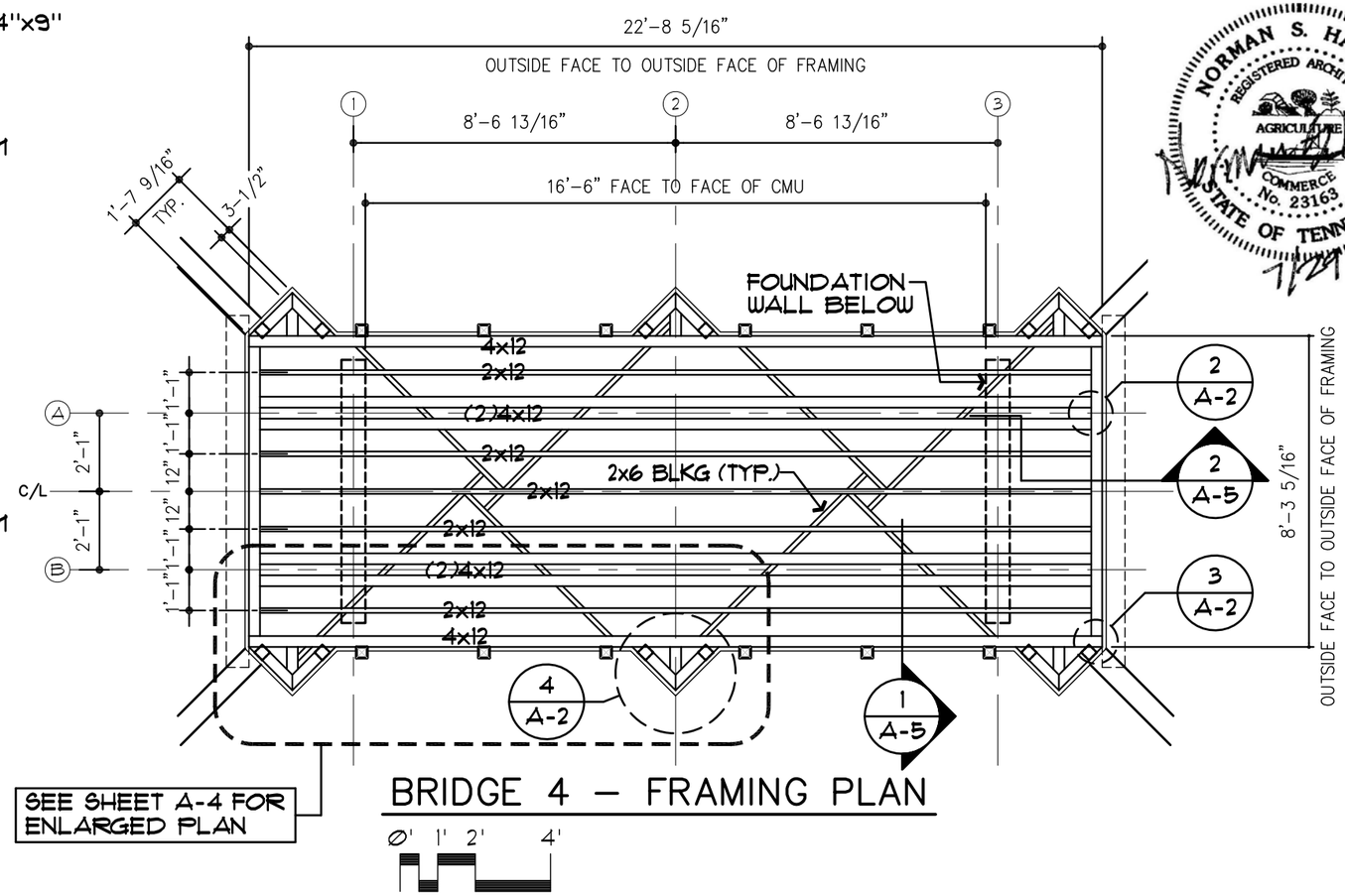

BRIDGE 4 – FRAMING PLAN

SEE SHEET A-4 FOR ENLARGED PLAN

NOTE: USE USS HOT-DIPPED GALVANIZED WASHERS AT EVERY BOLT HEAD AND NUT. USE USS HOT-DIPPED STEEL ANGLE CONNECTORS.

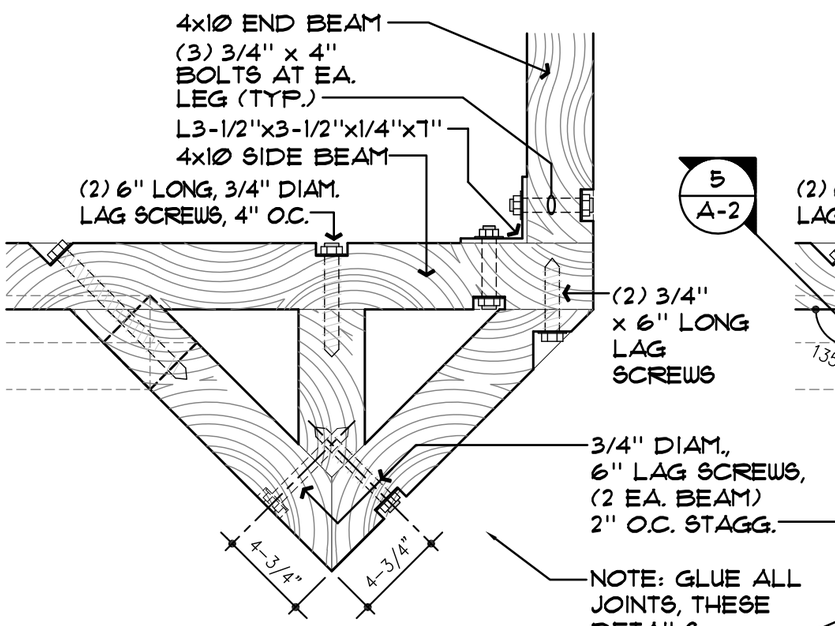

DETAIL 3

SCALE : 1-1/2" = 1'-0"

NOTE: GLUE ALL JOINTS, THESE DETAILS

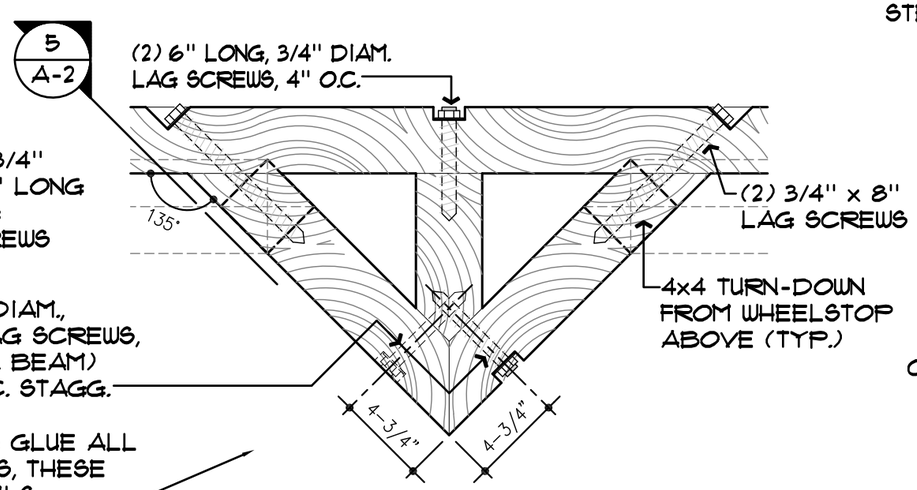

DETAIL 4

SCALE : 1-1/2" = 1'-0"

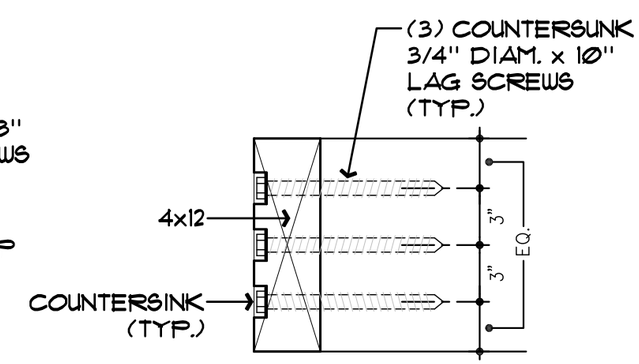

DETAIL 5

SCALE : 1-1/2" = 1'-0"

NORMAN S. HARBER
REGISTERED ARCHITECT
AGRICULTURE
COMMERCE
No. 23163
STATE OF TENNESSEE
7/29/19

Harber Architecture, Inc.
1303 Springfield Hwy, Goodlettsville, TN 37072
Phone: 615-497-5043 Email: normharber@gmail.com

ISSUE DATE: 5/4/18

REVISIONS: 1 7/29/19

LAKE TRAIL BRIDGE 4
RADNOR LAKE STATE NATURAL AREA
NASHVILLE, DAVIDSON COUNTY, TENNESSEE

SHEET NUMBER
A-2

GENERAL NOTES

Fastener Requirements:

All specified bolts, washers, nuts, steel angles, and steel plates shall be hot dipped galvanized. Washers shall be used at every interface with wood members except at the head of carriage bolts. 1

All connections for wood members shall be made with bolts or screws except 1 x 6 perimeter trim may be nailed with 8d galvanized ring shank nails. Appropriate length galvanized nails may be used in concealed locations as necessary to "set" members in place prior to making the permanent connection.

Concealed screws used in the floor framing system and subfloor shall be either stainless steel or Grip Rite (or equal) PrimeGuard Plus Green screws. Exposed screws on face of bridge, handrails and benches shall be Headcoat stainless steel trim head screws with Brown #34 colored heads (or approved equal). Length of the screw shall be appropriate for the application.

Retaining wall timbers shall be secured with seven inch long Headlok (or equal) flathead fasteners.

Stain Requirements:

All wood, including floor framing, shall be stained with PPG Flood Semi-Transparent Alkyd/Oil Stain (FLD802). Color formula is: B-2Y+12:C-44:F-1Y+6. "Cut" ends of wood members shall be stained prior to installation. 1

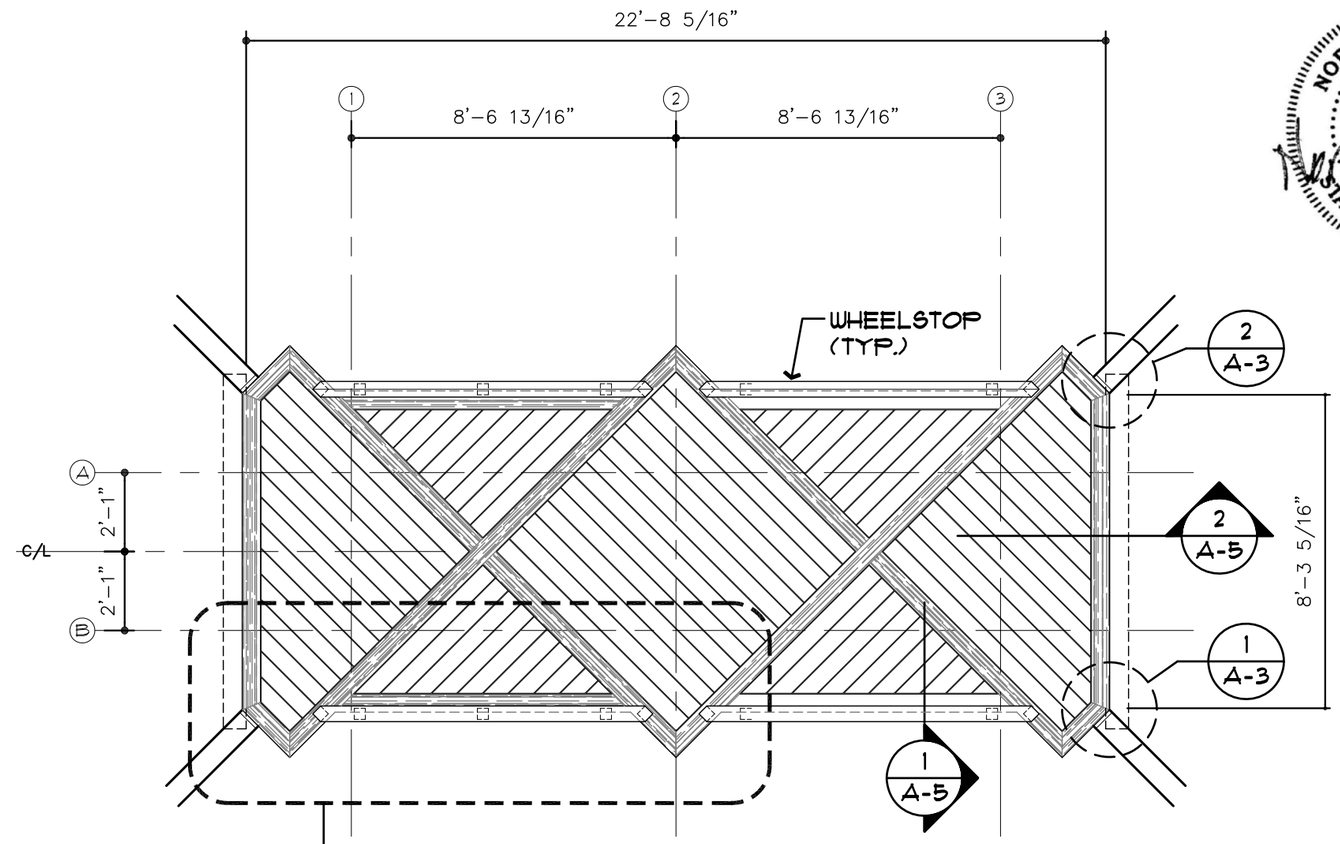

BRIDGE 4 – DECKING PLAN

Ø' 1' 2' 4'

NORMAN S. HARBER REGISTERED ARCHITECT AGRICULTURE COMMERCE No. 23163 STATE OF TENNESSEE 7/29/19

LUMBER SCHEDULE

NOMINAL SIZE	ACTUAL SIZE	SQUARE EDGE	1/8" RAD. EDGE	3/16" RAD. EDGE	FINISH DRESSED	ROUGH-SAWN	LOCATION
4x12	3-1/2" x 11-1/4"		●		●		
4x4	3-1/2" x 3-1/2"		●		●		
2x12	1-1/2" x 11-1/4"	●			●		
2X10	1-1/2" x 9-1/4"	●			●		
2x8	1-1/2" x 7-1/4"	●			●		
2x6	1-1/2" x 5-1/2"	●			●		
2x5	1-1/2" x 5"	●			●		SUBFLOOR
2x4	1-1/2" x 3-1/2"	●			●		
2x4	1-1/2" x 3-1/2"		●		●		HANDRAILS
2x2	1-1/2" x 1-1/2"		●		●		
1x6 1	7/8" x 5-3/4"			●	●		FLR. DECK/HANDRAILS
1x8	3/4" x 7-1/4"	●			●		POST CAPS
1x6	3/4" x 5-1/2"	●			●		PERIMETER TRIM
4x8	4" x 8"	●				●	RETAINING WALLS

NOTE: ALL LUMBER TO BE NO. 2 SOUTHERN YELLOW PINE (OR BETTER), PRESSURE-TREATED TO .60 PCF (OR BETTER)

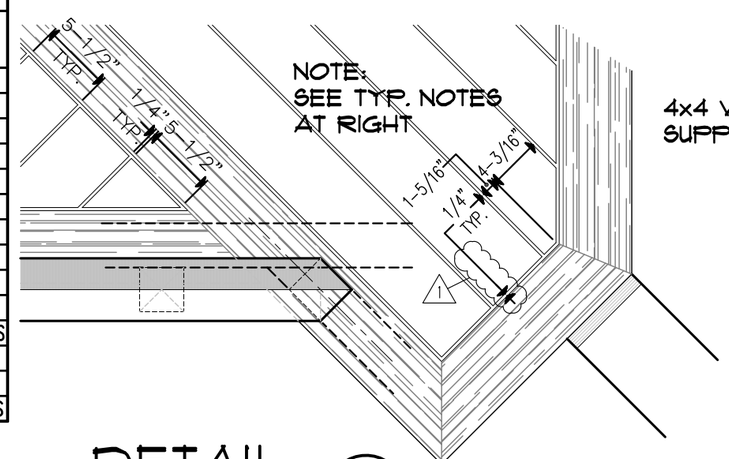

DETAIL 1

SCALE : 1" = 1'-Ø"

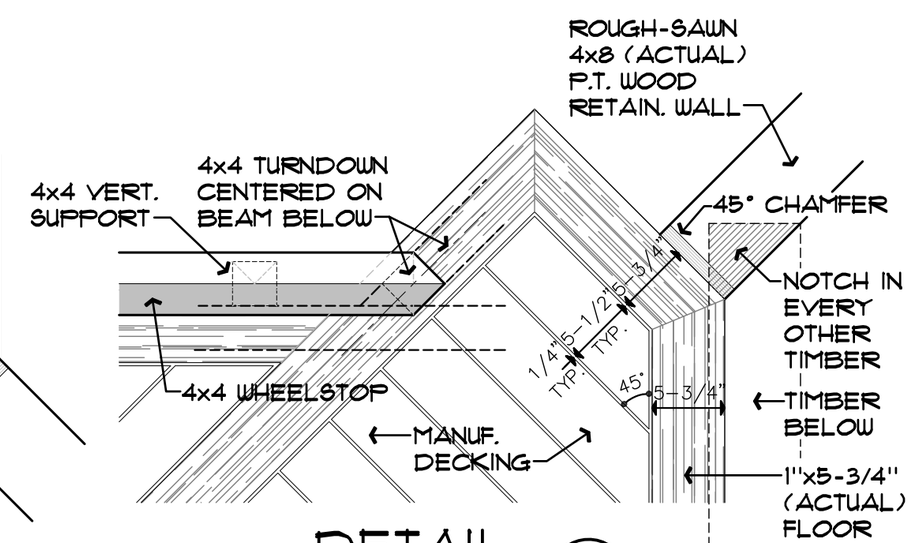

DETAIL 2

SCALE : 1" = 1'-Ø"

Harber Architecture, Inc.
1303 Springfield Hwy, Goodlettsville, TN 37072
Phone : 615 - 497 - 5043 Email : normharber@gmail.com

ISSUE DATE : 5 / 4 / 18

REVISIONS : 1 7 / 29 / 19

LAKE TRAIL BRIDGE 4
RADNOR LAKE STATE NATURAL AREA
NASHVILLE, DAVIDSON COUNTY, TENNESSEE

SHEET NUMBER A-3

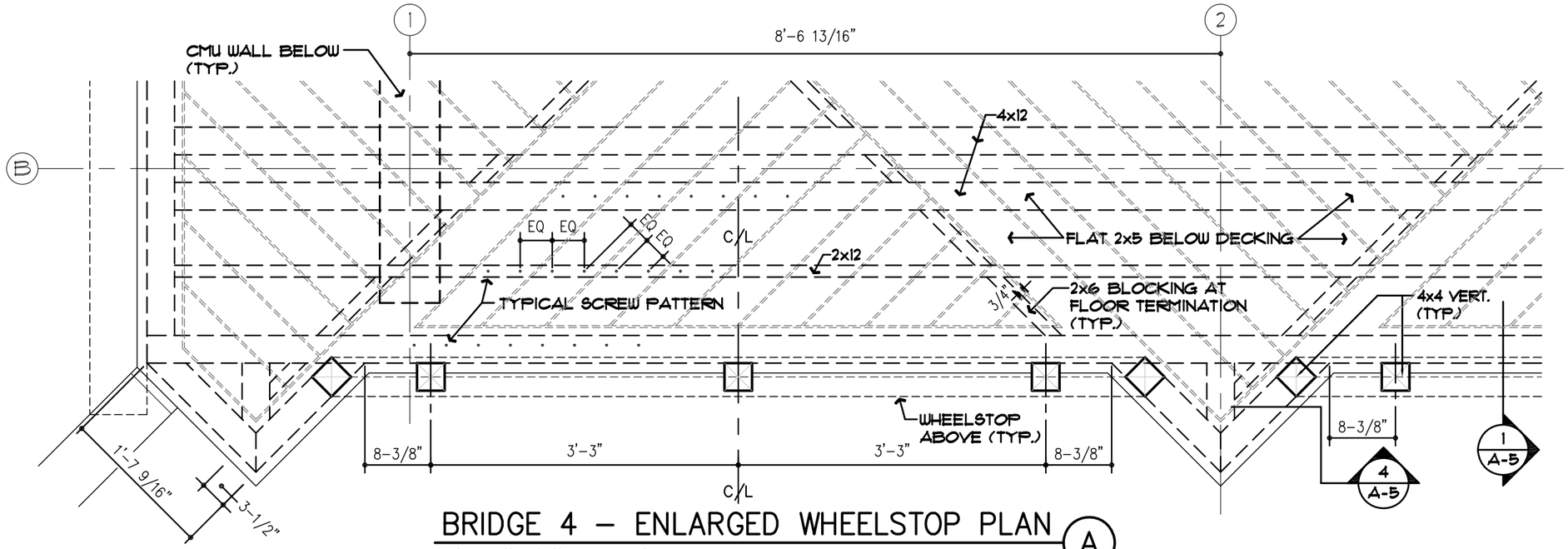

BRIDGE 4 – ENLARGED WHEELSTOP PLAN (A)

0' 6" 12" 2'

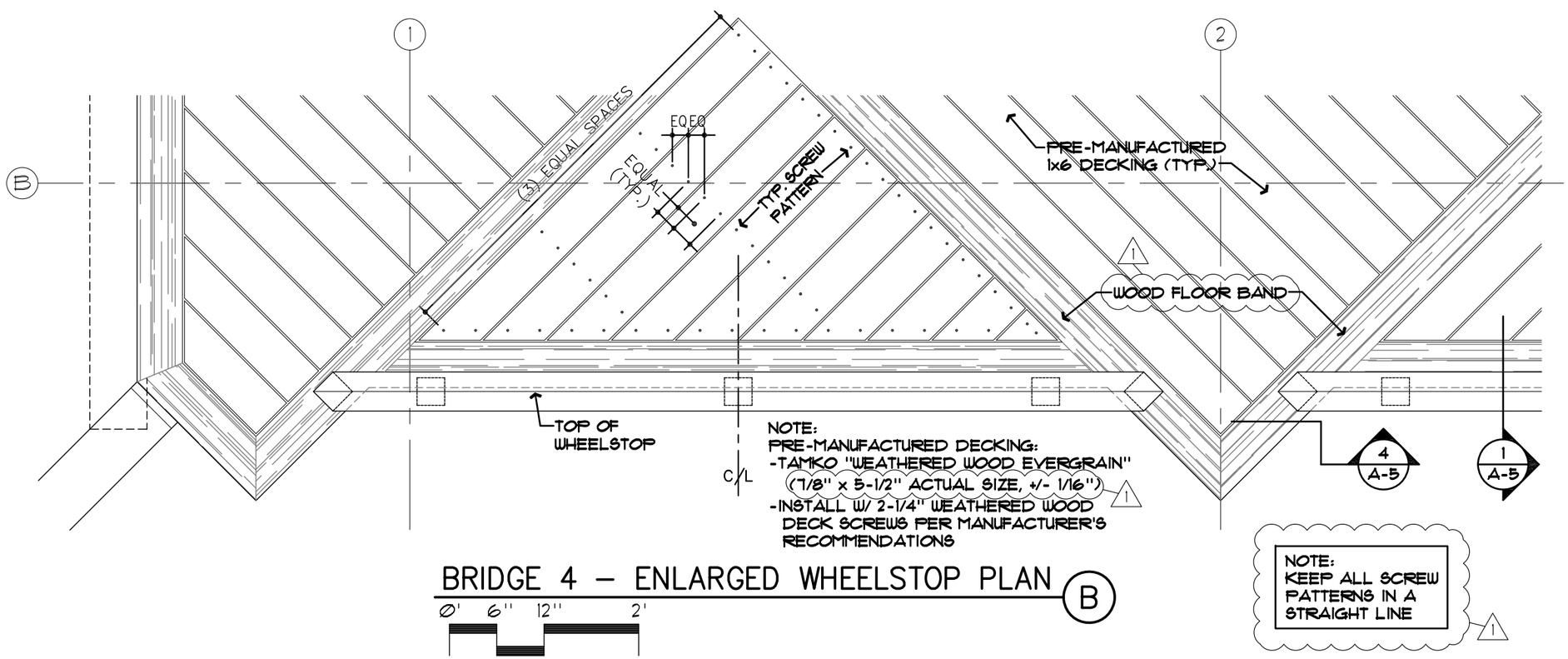

NOTE:
PRE-MANUFACTURED DECKING:
-TAMKO "WEATHERED WOOD EVERGRAIN"
(7/8" x 5-1/2" ACTUAL SIZE, +/- 1/16") 1
-INSTALL W/ 2-1/4" WEATHERED WOOD DECK SCREWS PER MANUFACTURER'S RECOMMENDATIONS

NOTE:
KEEP ALL SCREW PATTERNS IN A STRAIGHT LINE 1

BRIDGE 4 – ENLARGED WHEELSTOP PLAN (B)

0' 6" 12" 2'

NORMAN S. HARBER
REGISTERED ARCHITECT
AGRICULTURE
COMMERCE
No. 23163
STATE OF TENNESSEE
7/29/19

Harber Architecture, Inc.
1303 Springfield Hwy, Goodlettsville, TN 37072
Phone: 615-497-5043 Email: normharber@gmail.com

ISSUE DATE: 5/4/18

REVISIONS: 1 7/29/19

LAKE TRAIL BRIDGE 4
RADNOR LAKE STATE NATURAL AREA
NASHVILLE, DAVIDSON COUNTY, TENNESSEE

SHEET NUMBER
A-4

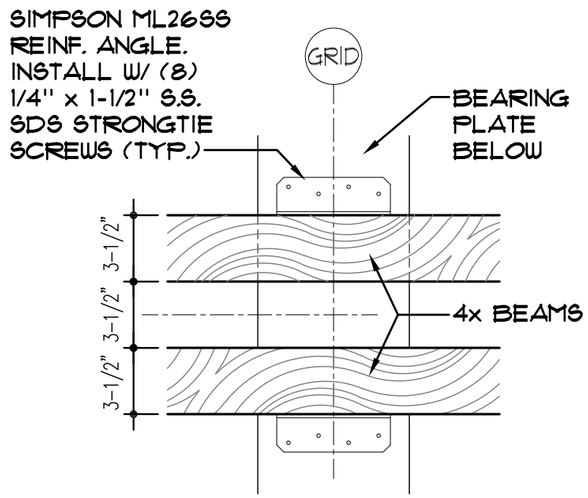

DETAIL 3

SCALE : 1-1/2" = 1'-Ø"

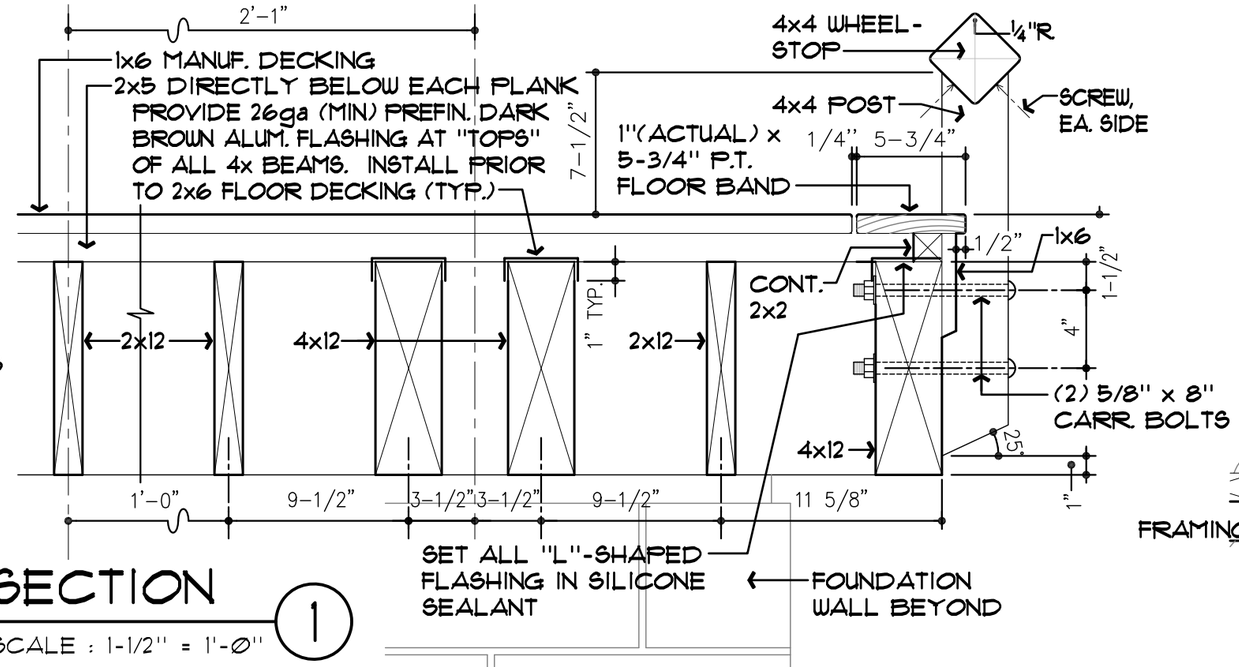

SECTION 1

SCALE : 1-1/2" = 1'-Ø"

NOTE: USE USS HOT-DIPPED GALVANIZED WASHERS AT EVERY BOLT HEAD AND NUT. USE USS HOT-DIPPED STEEL ANGLE CONNECTORS.

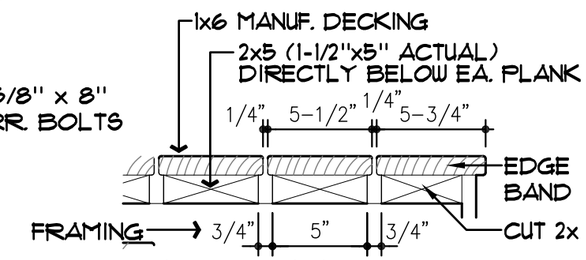

TYP. FLOOR

SCALE : 1-1/2" = 1'-Ø"

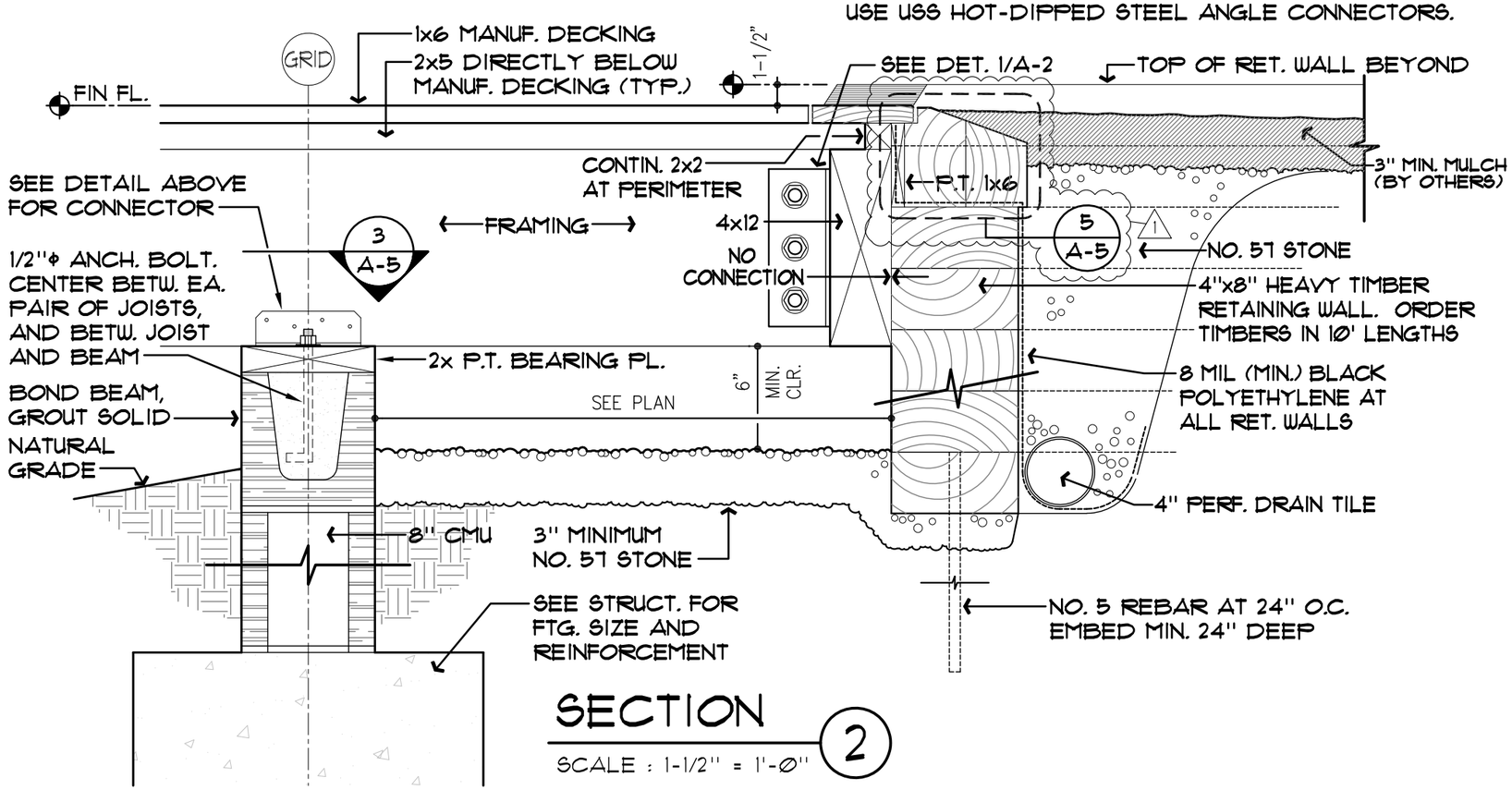

SECTION 2

SCALE : 1-1/2" = 1'-Ø"

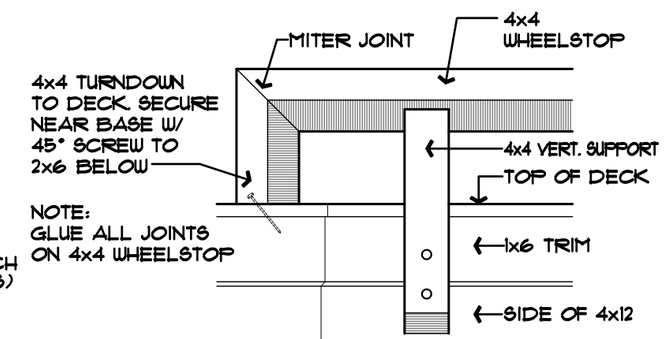

ELEVATION 4

SCALE : 1" = 1'-Ø"

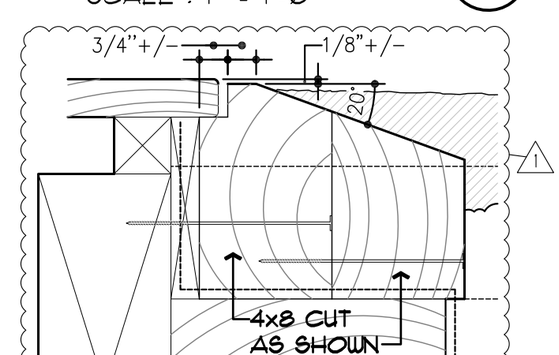

DETAIL 5

SCALE : 3" = 1'-Ø"

Harber Architecture, Inc.
1303 Springfield Hwy, Goodlettsville, TN 37072
Phone: 615-497-5043 Email: normharber@gmail.com

ISSUE DATE : 5/4/18

REVISIONS : 1 7/29/19

LAKE TRAIL BRIDGE 4
RADNOR LAKE STATE NATURAL AREA
NASHVILLE, DAVIDSON COUNTY, TENNESSEE

SHEET NUMBER
A-5

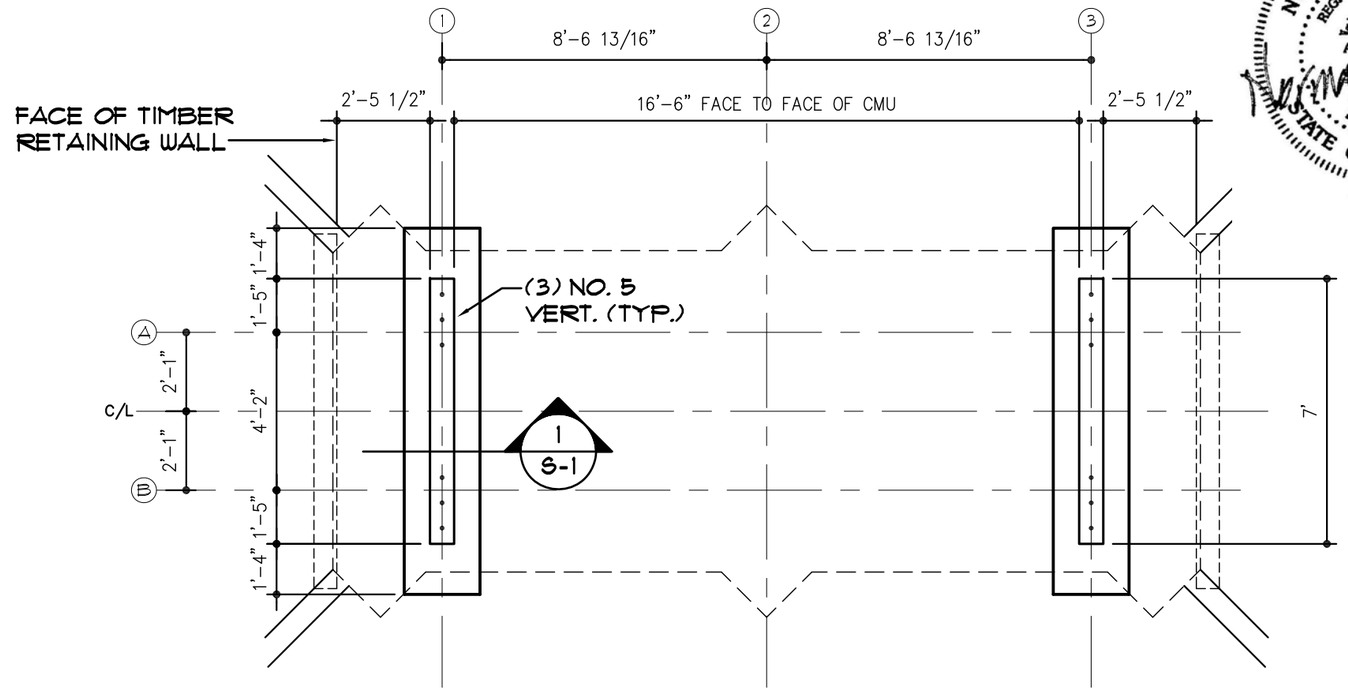

BRIDGE 4 – FOUNDATION PLAN

0' 1' 2' 4'

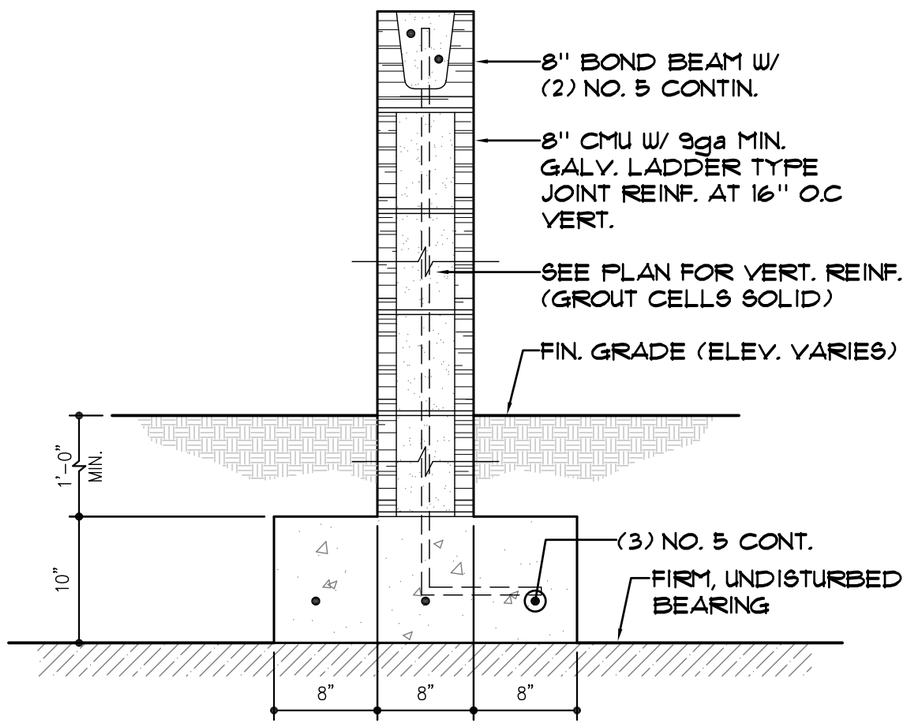

DETAIL 1

SCALE : 1" = 1'-0"

STRUCTURAL NOTES

CONCRETE

1. ALL CONCRETE SHALL HAVE A 28-DAY STRENGTH OF 3000 PSI.
2. ALL REINFORCEMENT BARS SHALL BE ASTM A-615, GRADE 60.
3. GROUT FOR FILLING CMU CELLS SHALL BE ASTM C-476 WITH A 28-DAY STRENGTH OF 3000 PSI.

DESIGN LOADS

1. LIVE LOAD = 100 PSF
2. VEHICLE LOAD = TOOLCAT 5600 WITH MAXIMUM WHEEL LOAD = 1800 LBS.

NORMAN S. HARBER
REGISTERED ARCHITECT
AGRICULTURE
COMMERCE
No. 23163
STATE OF TENNESSEE
7/29/19

Harber Architecture, Inc.
1303 Springfield Hwy, Goodlettsville, TN 37072
Phone: 615-497-5043 Email: normharber@gmail.com

ISSUE DATE: 5/4/18

REVISIONS: 1 7/29/19

LAKE TRAIL BRIDGE 4
RADNOR LAKE STATE NATURAL AREA
NASHVILLE, DAVIDSON COUNTY, TENNESSEE

SHEET NUMBER
S-1

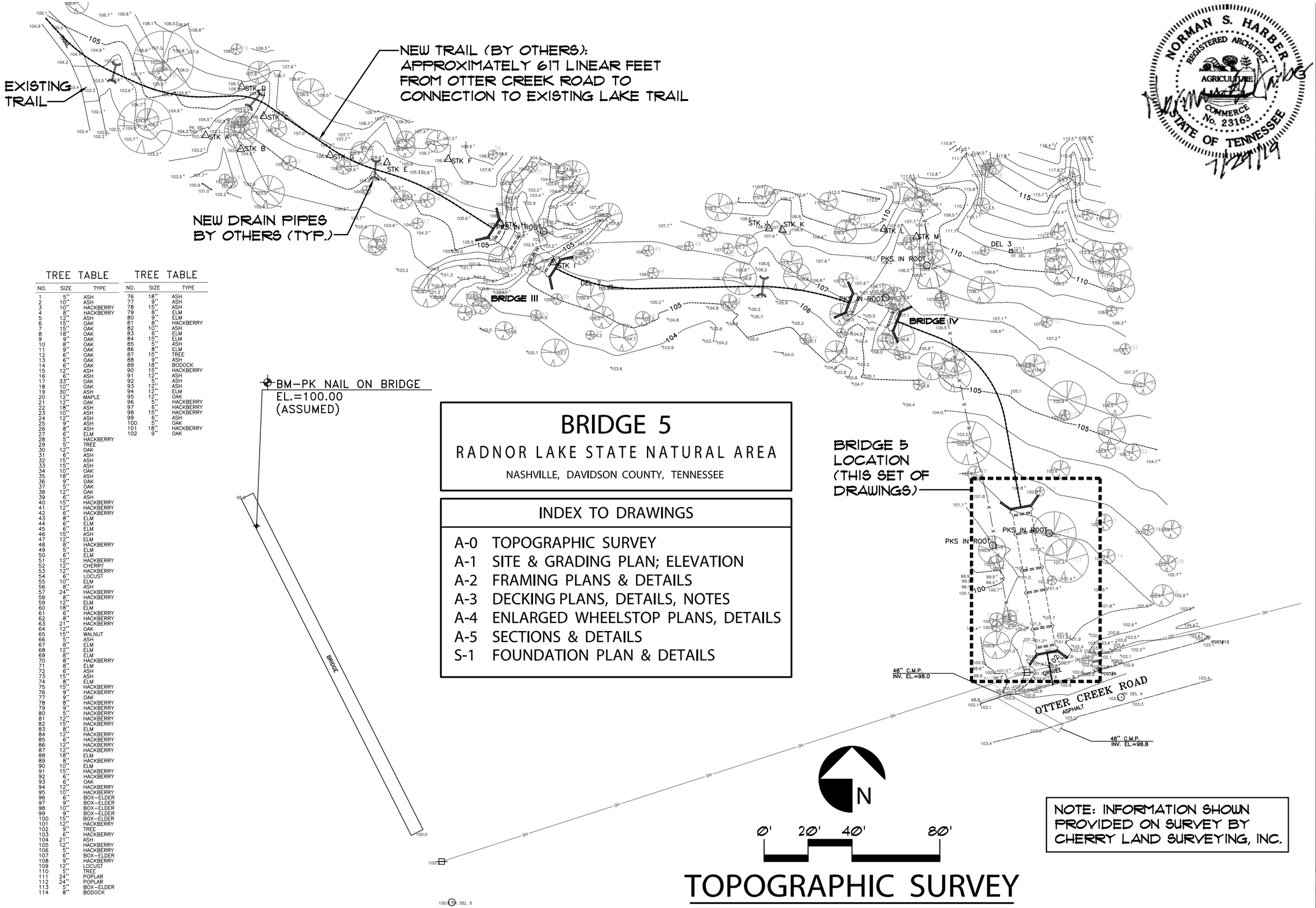

BRIDGE 5

RADNOR LAKE STATE NATURAL AREA

NASHVILLE, DAVIDSON COUNTY, TENNESSEE

INDEX TO DRAWINGS

A-0 TOPOGRAPHIC SURVEY
A-1 SITE & GRADING PLAN; ELEVATION
A-2 FRAMING PLANS & DETAILS
A-3 DECKING PLANS, DETAILS, NOTES
A-4 ENLARGED WHEELSTOP PLANS, DETAILS
A-5 SECTIONS & DETAILS
S-1 FOUNDATION PLAN & DETAILS

TREE TABLE

NO.	SIZE	TYPE
1	5"	ASH
2	10"	ASH
3	10"	HACKBERRY
4	8"	HACKBERRY
5	12"	ASH
6	15"	OAK
7	15"	OAK
8	18"	OAK
9	9"	OAK
10	8"	OAK
11	9"	OAK
12	6"	OAK
13	6"	OAK
14	6"	OAK
15	12"	ASH
16	6"	ASH
17	33"	OAK
18	10"	OAK
19	30"	ASH
20	12"	MAPLE
21	12"	OAK
22	18"	ASH
23	10"	ASH
24	12"	ASH
25	9"	ASH
26	8"	ASH
27	6"	ELM
28	5"	HACKBERRY
29	5"	TREE
30	12"	OAK
31	6"	ASH
32	15"	ASH
33	15"	ASH
34	10"	OAK
35	18"	ASH
36	9"	OAK
37	5"	OAK
38	12"	OAK
39	6"	ASH
40	15"	HACKBERRY
41	12"	HACKBERRY
42	6"	HACKBERRY
43	8"	ELM
44	6"	ELM
45	6"	ELM
46	15"	ASH
47	12"	ELM
48	8"	HACKBERRY
49	5"	ELM
50	6"	ELM
51	12"	HACKBERRY
52	12"	CHERRY
53	12"	HACKBERRY
54	6"	LOCUST
55	10"	ELM
56	8"	ASH
57	24"	HACKBERRY
58	8"	HACKBERRY
59	12"	ELM
60	18"	ELM
61	6"	HACKBERRY
62	8"	HACKBERRY
63	21"	HACKBERRY
64	12"	OAK
65	15"	WALNUT
66	5"	ASH
67	8"	ELM
68	12"	ELM
69	8"	ELM
70	8"	HACKBERRY
71	8"	ELM
72	6"	ASH
73	15"	ASH
74	8"	ELM
75	15"	HACKBERRY
76	9"	HACKBERRY
77	9"	OAK
78	8"	HACKBERRY
79	9"	HACKBERRY
80	5"	HACKBERRY
81	12"	HACKBERRY
82	15"	HACKBERRY
83	8"	ELM
84	12"	HACKBERRY
85	6"	HACKBERRY
86	12"	HACKBERRY
87	12"	HACKBERRY
88	18"	ELM
89	8"	HACKBERRY
90	10"	ELM
91	15"	HACKBERRY
92	6"	HACKBERRY
93	6"	OAK
94	12"	HACKBERRY
95	10"	HACKBERRY
96	6"	BOX-ELDER
97	9"	BOX-ELDER
98	10"	BOX-ELDER
99	9"	BOX-ELDER
100	15"	BOX-ELDER
101	12"	HACKBERRY
102	9"	TREE
103	6"	HACKBERRY
104	21"	ASH
105	12"	HACKBERRY
106	5"	HACKBERRY
107	6"	BOX-ELDER
108	9"	HACKBERRY
109	12"	LOCUST
110	5"	TREE
111	24"	POPLAR
112	24"	POPLAR
113	5"	BOX-ELDER
114	8"	BODOCK

TREE TABLE

NO.	SIZE	TYPE
76	18"	ASH
77	9"	ASH
78	15"	ASH
79	8"	ELM
80	9"	ELM
81	8"	HACKBERRY
82	10"	ASH
83	6"	ELM
84	15"	ELM
85	5"	ASH
86	8"	ELM
87	15"	TREE
88	9"	ASH
89	18"	BODOCK
90	15"	HACKBERRY
91	12"	ASH
92	5"	ASH
93	12"	ASH
94	12"	ELM
95	12"	OAK
96	5"	HACKBERRY
97	6"	HACKBERRY
98	15"	HACKBERRY
99	6"	ASH
100	5"	OAK
101	18"	HACKBERRY
102	9"	OAK

NOTE: INFORMATION SHOWN PROVIDED ON SURVEY BY CHERRY LAND SURVEYING, INC.

TOPOGRAPHIC SURVEY

NORMAN S. HARBER
REGISTERED ARCHITECT
AGRICULTURE
COMMERCE
No. 23163
STATE OF TENNESSEE
7/29/19

Harber Architecture, Inc.
1303 Springfield Hwy, Goodlettsville, TN 37072
Phone: 615-497-5043 Email: normharber@gmail.com

ISSUE DATE: 5/4/18

REVISIONS: 1 7/29/19

LAKE TRAIL BRIDGE 5
RADNOR LAKE STATE NATURAL AREA
NASHVILLE, DAVIDSON COUNTY, TENNESSEE

SHEET NUMBER
A-0

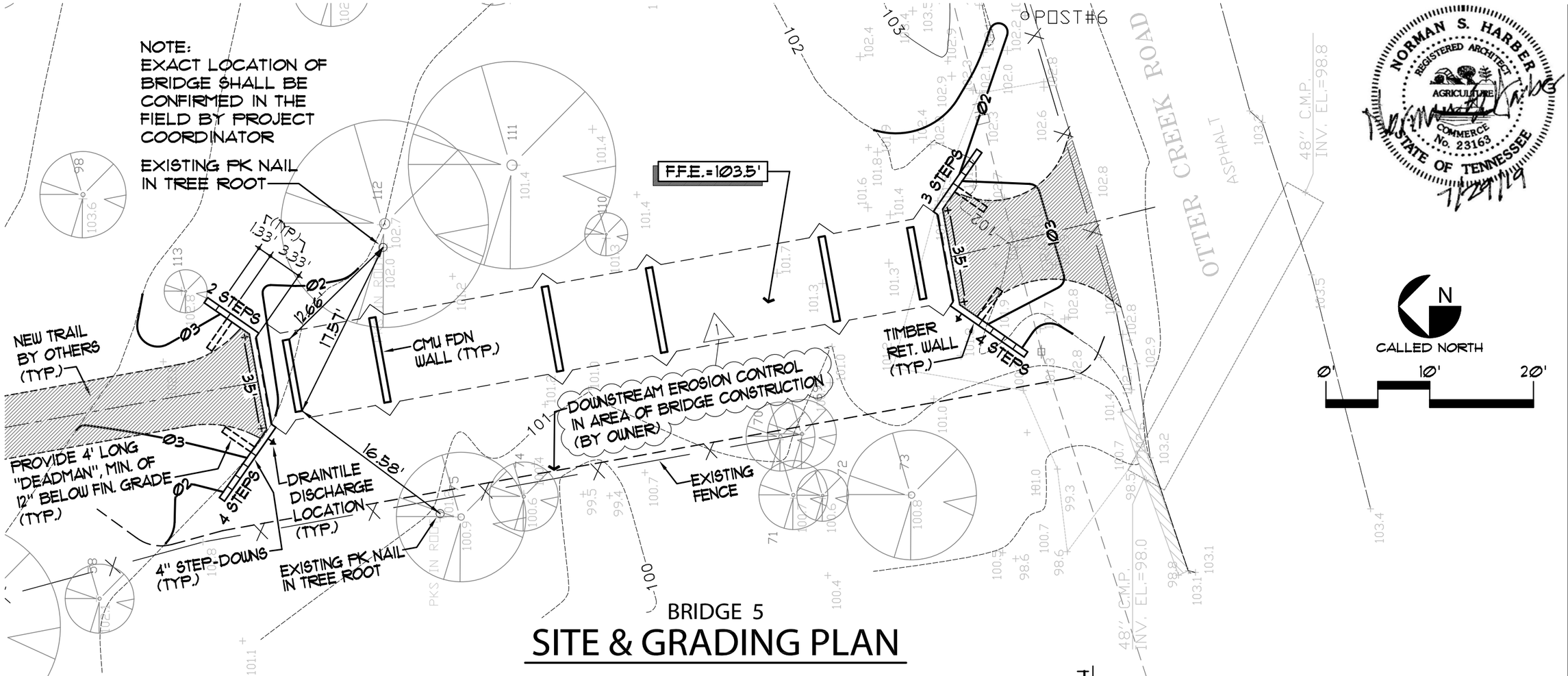

BRIDGE 5

SITE & GRADING PLAN

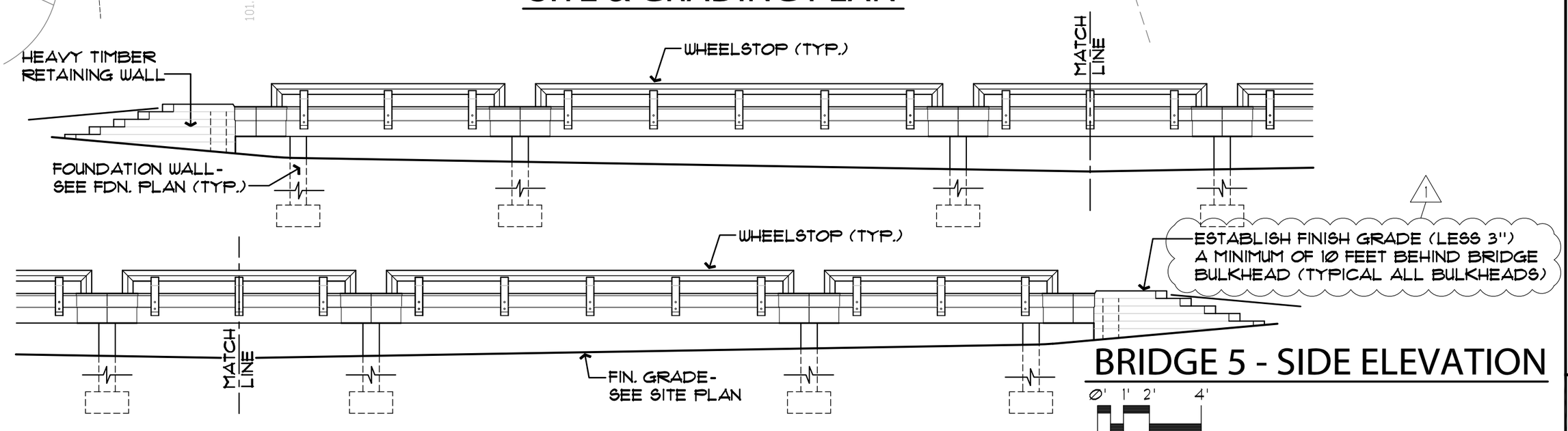

BRIDGE 5 - SIDE ELEVATION

NORMAN S. HARBER
REGISTERED ARCHITECT
AGRICULTURE
COMMERCE
No. 23163
STATE OF TENNESSEE
7/29/19

Harber Architecture, Inc.
1303 Springfield Hwy, Goodlettsville, TN 37072
Phone: 615 - 497 - 5043 Email: normharber@gmail.com

ISSUE DATE: 5 / 4 / 18

REVISIONS: 1 7 / 29 / 19

LAKE TRAIL BRIDGE 5
RADNOR LAKE STATE NATURAL AREA
NASHVILLE, DAVIDSON COUNTY, TENNESSEE

SHEET NUMBER
A-1

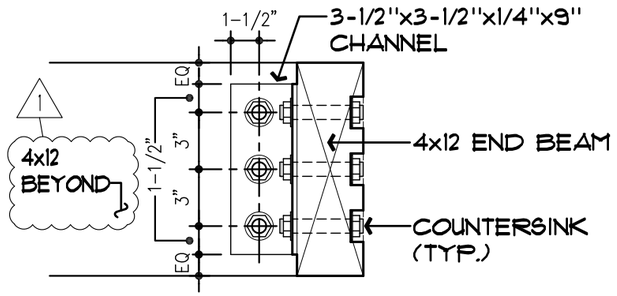

DETAIL 1

SCALE : 1-1/2" = 1'-0"

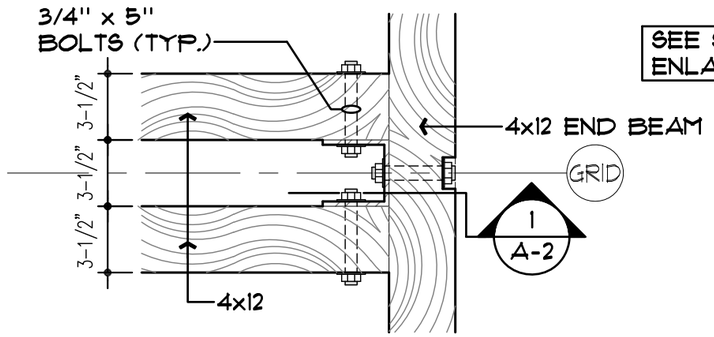

DETAIL 2

SCALE : 1-1/2" = 1'-0"

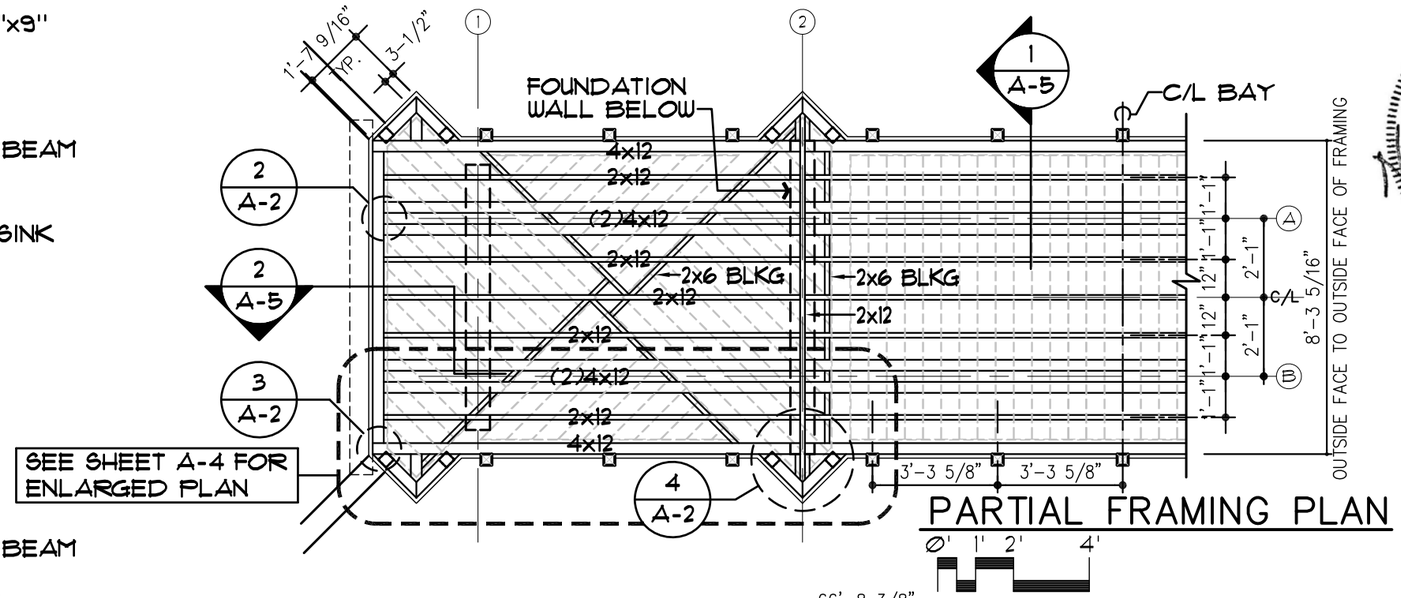

PARTIAL FRAMING PLAN

0' 1' 2' 4'

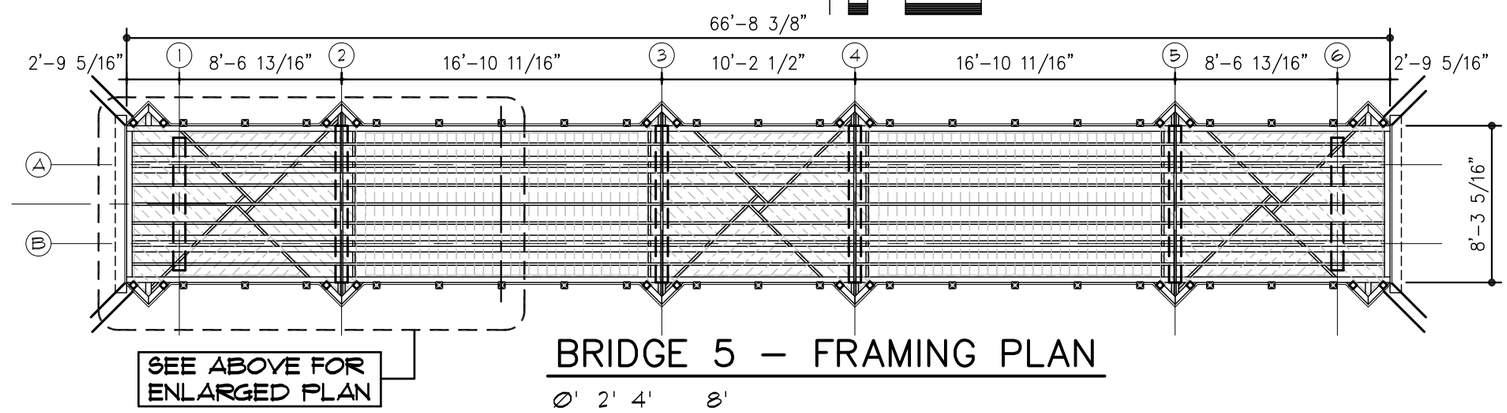

BRIDGE 5 – FRAMING PLAN

0' 2' 4' 8'

NOTE: USE USS HOT-DIPPED GALVANIZED WASHERS AT EVERY BOLT HEAD AND NUT. USE USS HOT-DIPPED STEEL ANGLE CONNECTORS.

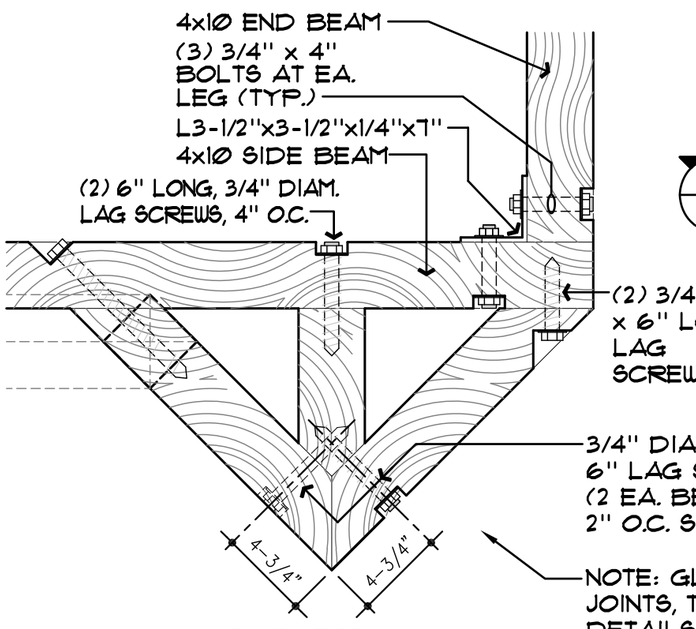

NOTE: GLUE ALL JOINTS, THESE DETAILS

DETAIL 3

SCALE : 1-1/2" = 1'-0"

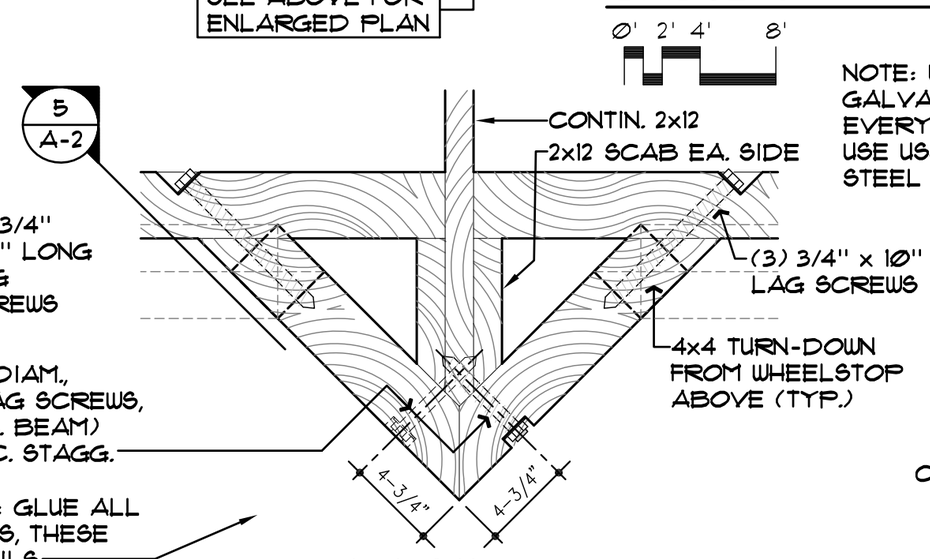

DETAIL 4

SCALE : 1-1/2" = 1'-0"

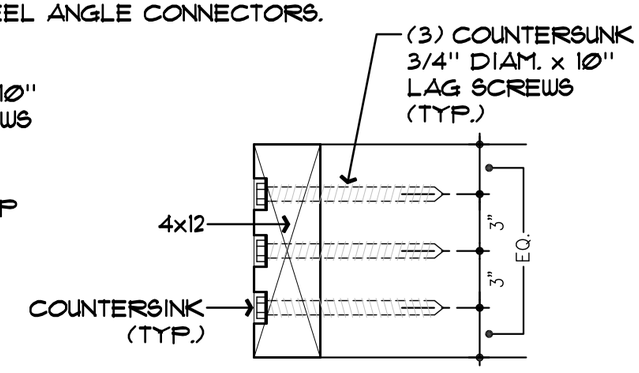

DETAIL 5

SCALE : 1-1/2" = 1'-0"

Harber Architecture, Inc.
1303 Springfield Hwy, Goodlettsville, TN 37072
Phone: 615-497-5043 Email: normharber@gmail.com

ISSUE DATE: 5/4/18

REVISIONS: 1 7/29/19

LAKE TRAIL BRIDGE 5
RADNOR LAKE STATE NATURAL AREA
NASHVILLE, DAVIDSON COUNTY, TENNESSEE

SHEET NUMBER
A-2

GENERAL NOTES

Fastener Requirements:

All specified bolts, washers, nuts, steel angles, and steel plates shall be hot dipped galvanized. Washers shall be used at every interface with wood members except at the head of carriage bolts. 1

All connections for wood members shall be made with bolts or screws except 1 x 6 perimeter trim may be nailed with 8d galvanized ring shank nails. Appropriate length galvanized nails may be used in concealed locations as necessary to "set" members in place prior to making the permanent connection.

Concealed screws used in the floor framing system and subfloor shall be either stainless steel or Grip Rite (or equal) PrimeGuard Plus Green screws. Exposed screws on face of bridge, handrails and benches shall be Headcoat stainless steel trim head screws with Brown #34 colored heads (or approved equal). Length of the screw shall be appropriate for the application.

Retaining wall timbers shall be secured with seven inch long Headlok (or equal) flathead fasteners.

Stain Requirements:

All wood, including floor framing, shall be stained with PPG Flood Semi-Transparent Alkyd/Oil Stain (FLD802). Color formula is: B-2Y+12:C-44:F-1Y+6. "Cut" ends of wood members shall be stained prior to installation. 1

LUMBER SCHEDULE

NOMINAL SIZE	ACTUAL SIZE	SQUARE EDGE	1/8" RAD. EDGE	3/16" RAD. EDGE	FINISH DRESSED	ROUGH-SAWN	LOCATION
4x12	3-1/2" x 11-1/4"		●		●		
4x4	3-1/2" x 3-1/2"		●		●		
2x12	1-1/2" x 11-1/4"	●			●		
2X10	1-1/2" x 9-1/4"	●			●		
2x8	1-1/2" x 7-1/4"	●			●		
2x6	1-1/2" x 5-1/2"	●			●		
2x5	1-1/2" x 5"	●			●		SUBFLOOR
2x4	1-1/2" x 3-1/2"	●			●		
2x4	1-1/2" x 3-1/2"		●		●		HANDRAILS
2x2	1-1/2" x 1-1/2"		●		●		
1x6 1	7/8" x 5-3/4"			●	●		FLR. DECK/HANDRAILS
1x8	3/4" x 7-1/4"	●			●		POST CAPS
1x6	3/4" x 5-1/2"	●			●		PERIMETER TRIM
4x8	4" x 8"	●				●	RETAINING WALLS

NOTE: ALL LUMBER TO BE NO. 2 SOUTHERN YELLOW PINE (OR BETTER), PRESSURE-TREATED TO .60 PCF (OR BETTER)

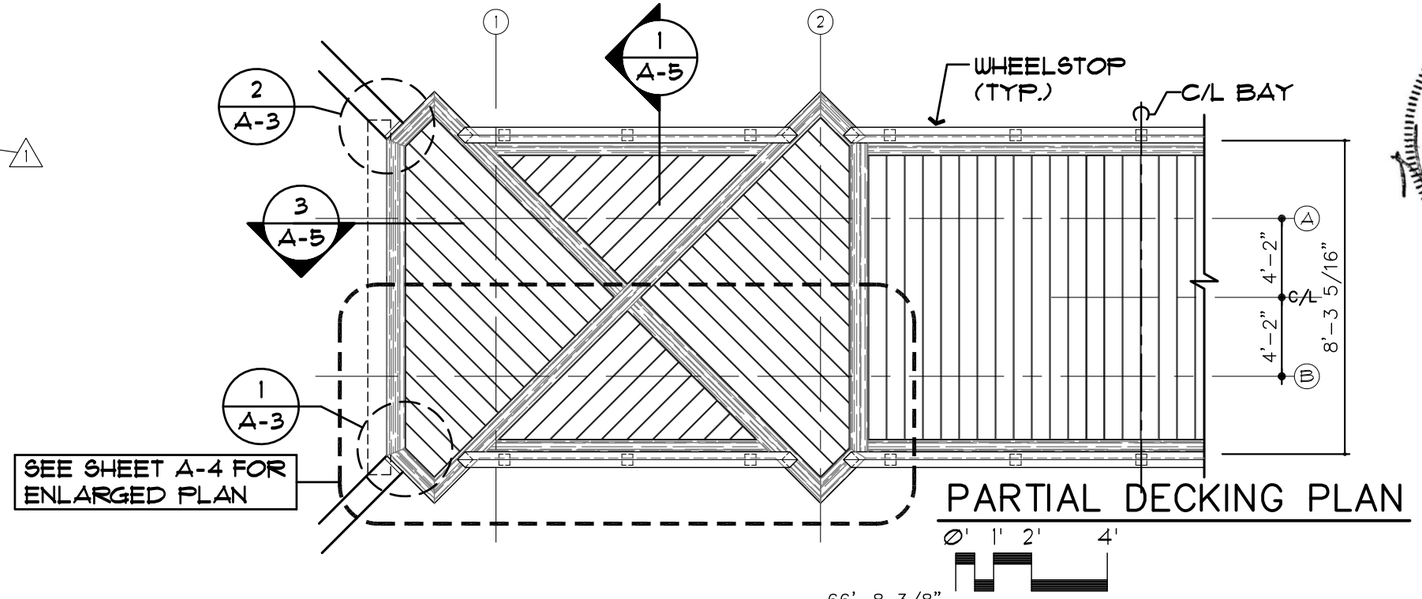

PARTIAL DECKING PLAN

Ø' 1' 2' 4'

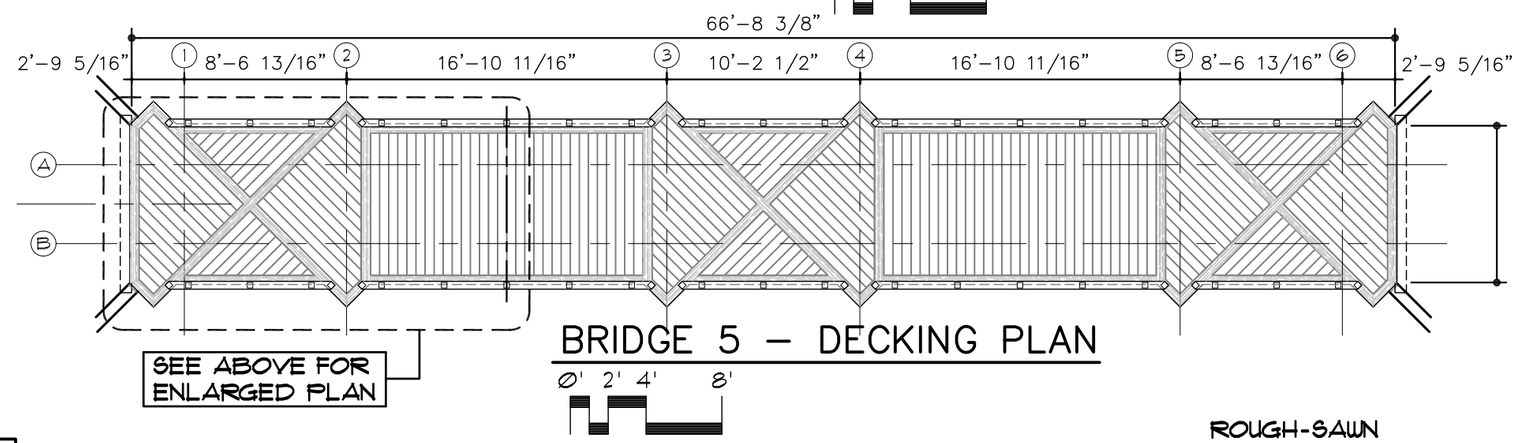

BRIDGE 5 – DECKING PLAN

Ø' 2' 4' 8'

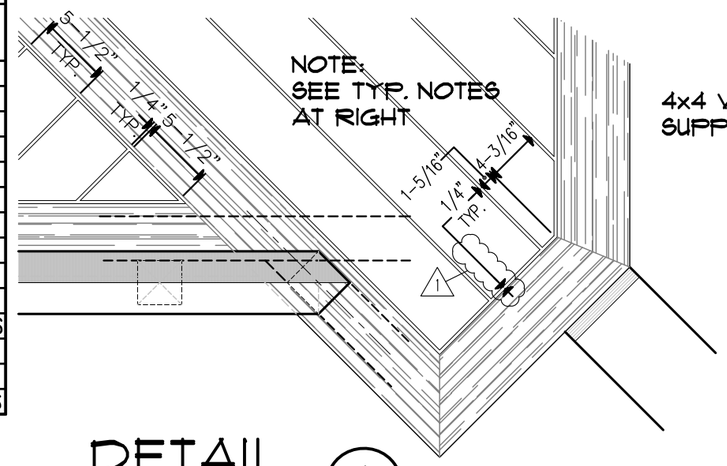

DETAIL 1

SCALE : 1" = 1'-Ø"

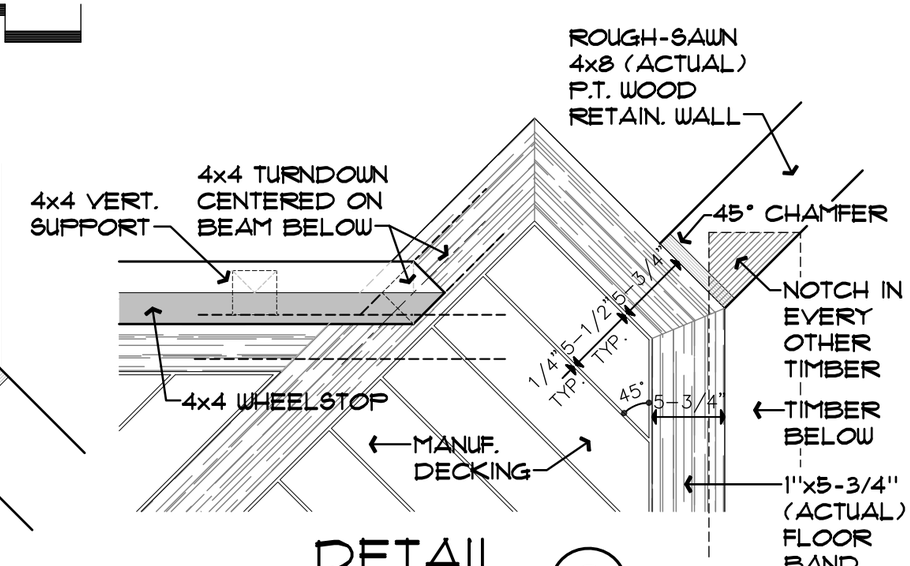

DETAIL 2

SCALE : 1" = 1'-Ø"

Harber Architecture, Inc.
1303 Springfield Hwy, Goodlettsville, TN 37072
Phone : 615 - 497 - 5043 Email : normharber@gmail.com

ISSUE DATE : 5 / 4 / 18

REVISIONS : 1 7 / 29 / 19

LAKE TRAIL BRIDGE 5
RADNOR LAKE STATE NATURAL AREA
NASHVILLE, DAVIDSON COUNTY, TENNESSEE

SHEET NUMBER
A-3

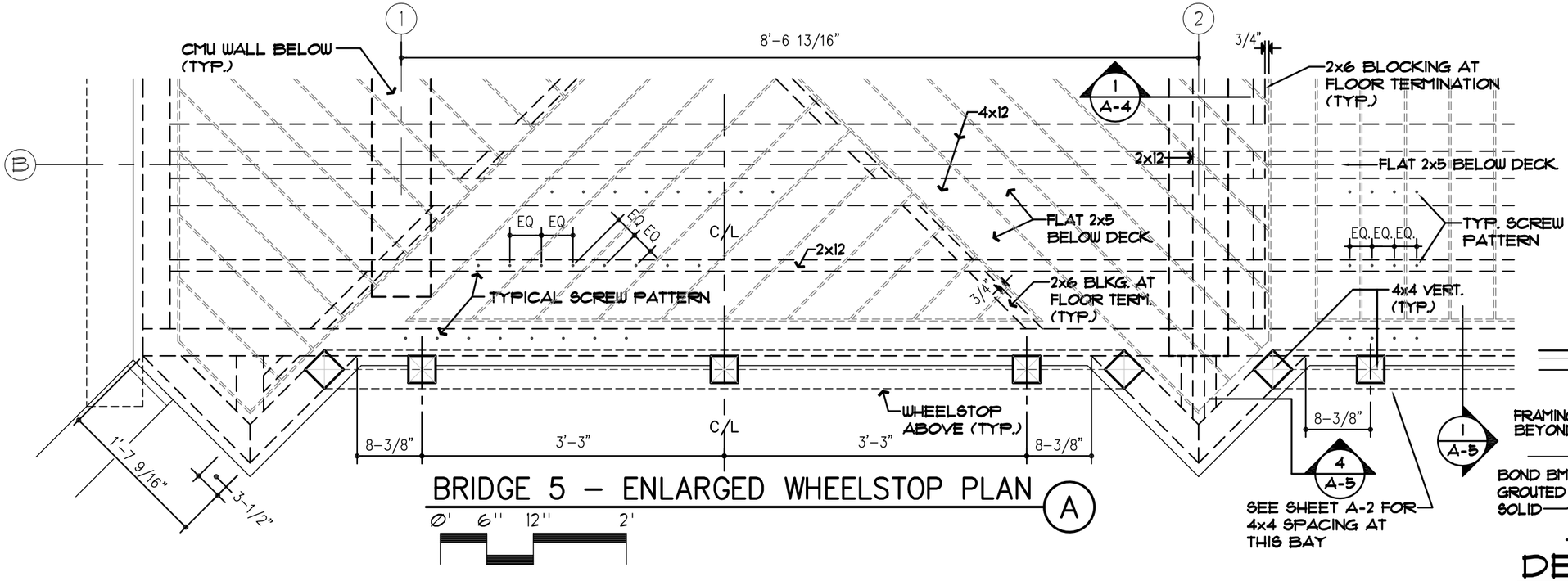

BRIDGE 5 – ENLARGED WHEELSTOP PLAN (A)

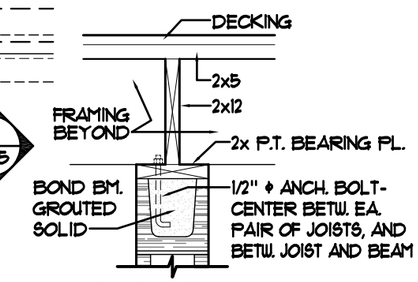

DETAIL (1)
NO SCALE

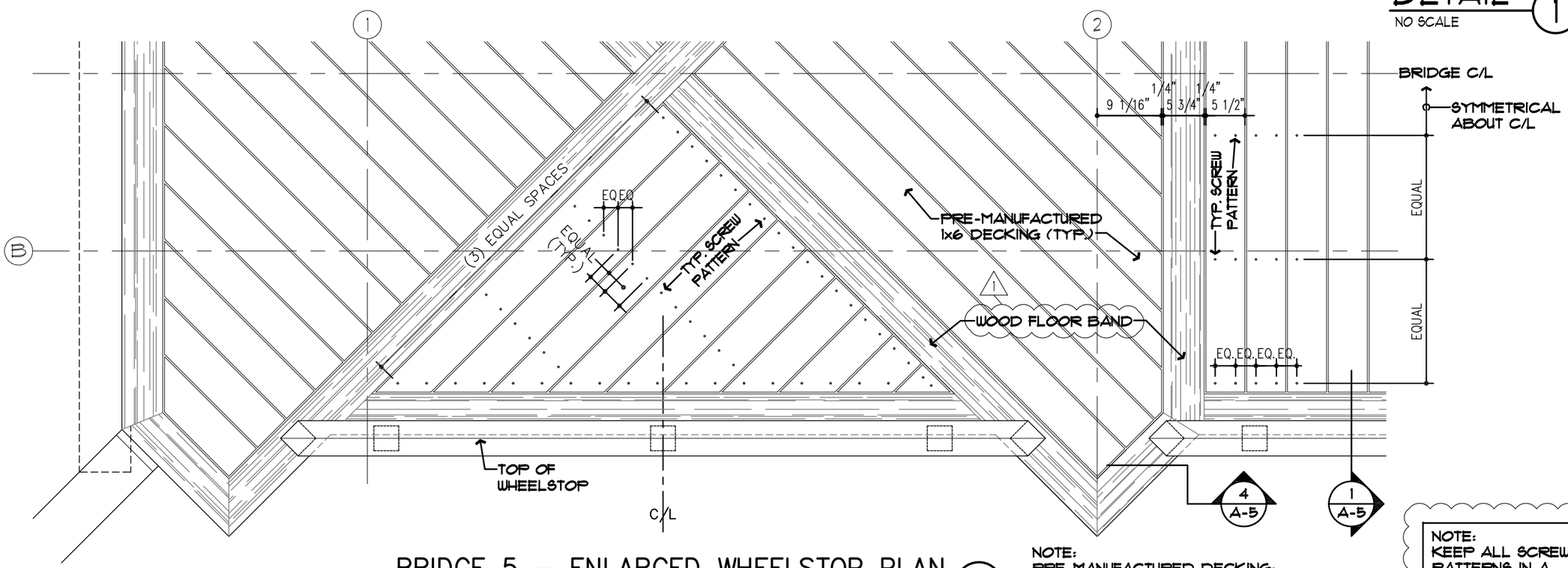

BRIDGE 5 – ENLARGED WHEELSTOP PLAN (B)

NOTE:
PRE-MANUFACTURED DECKING:
-TAMKO "WEATHERED WOOD EVERGRAIN" (7/8" x 5-1/2" ACTUAL SIZE, +/- 1/16") 1
-INSTALL W/ 2-1/4" WEATHERED WOOD DECK SCREWS PER MANUFACTURER'S RECOMMENDATIONS

NOTE:
KEEP ALL SCREW PATTERNS IN A STRAIGHT LINE 1

NORMAN S. HARBER
REGISTERED ARCHITECT
AGRICULTURE
COMMERCE
No. 23163
STATE OF TENNESSEE
7/29/19

Harber Architecture, Inc.
1303 Springfield Hwy, Goodlettsville, TN 37072
Phone: 615-497-5043 Email: normharber@gmail.com

ISSUE DATE: 5/4/18

REVISIONS: 1 7/29/19

LAKE TRAIL BRIDGE 5
RADNOR LAKE STATE NATURAL AREA
NASHVILLE, DAVIDSON COUNTY, TENNESSEE

SHEET NUMBER
A-4

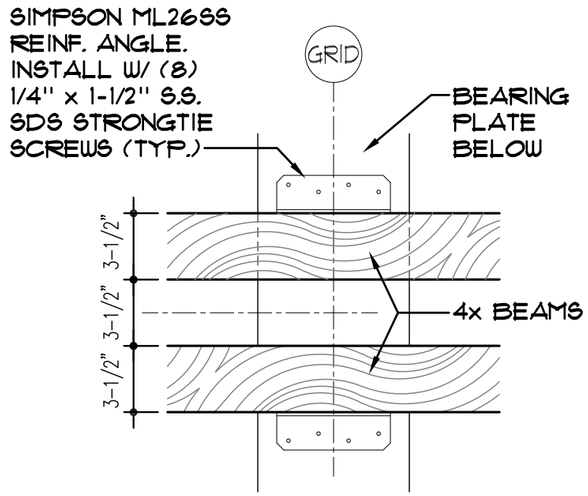

DETAIL 3

SCALE : 1-1/2" = 1'-Ø"

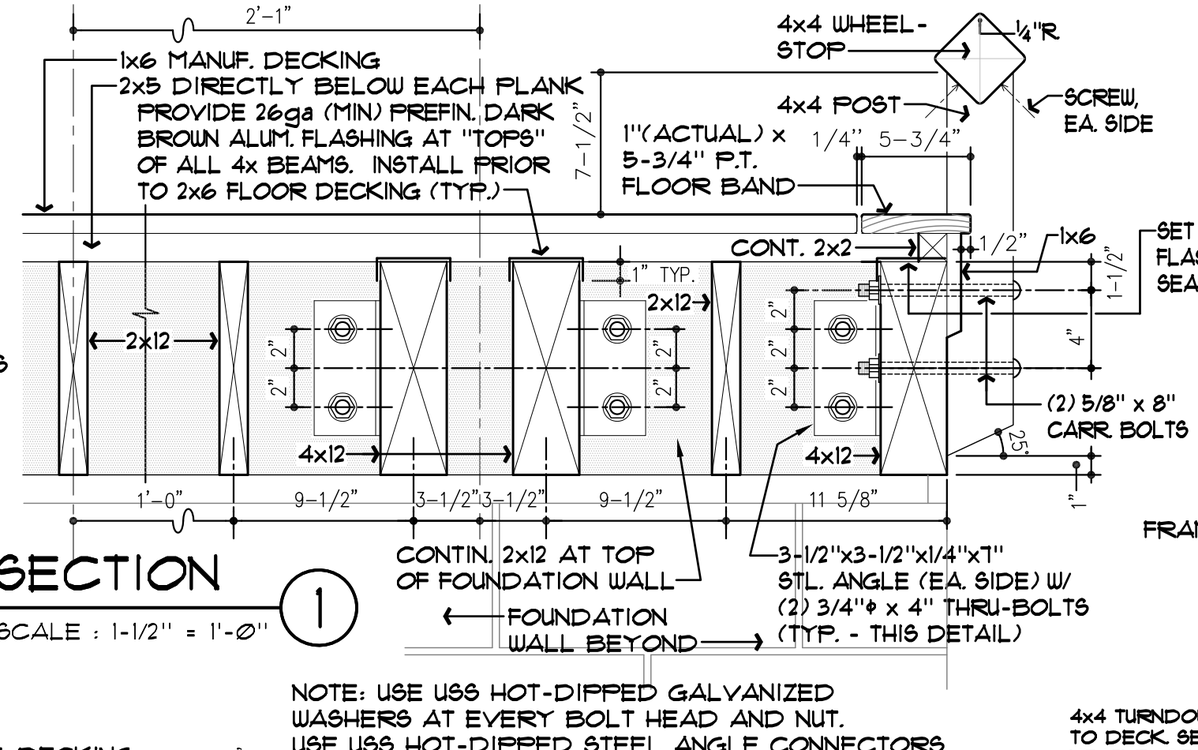

SECTION 1

SCALE : 1-1/2" = 1'-Ø"

NOTE: USE USS HOT-DIPPED GALVANIZED
WASHERS AT EVERY BOLT HEAD AND NUT.
USE USS HOT-DIPPED STEEL ANGLE CONNECTORS.

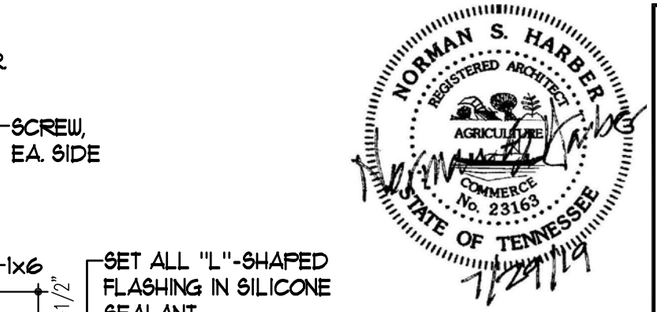

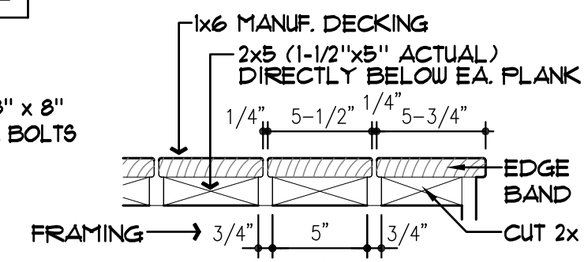

TYP. FLOOR

SCALE : 1-1/2" = 1'-Ø"

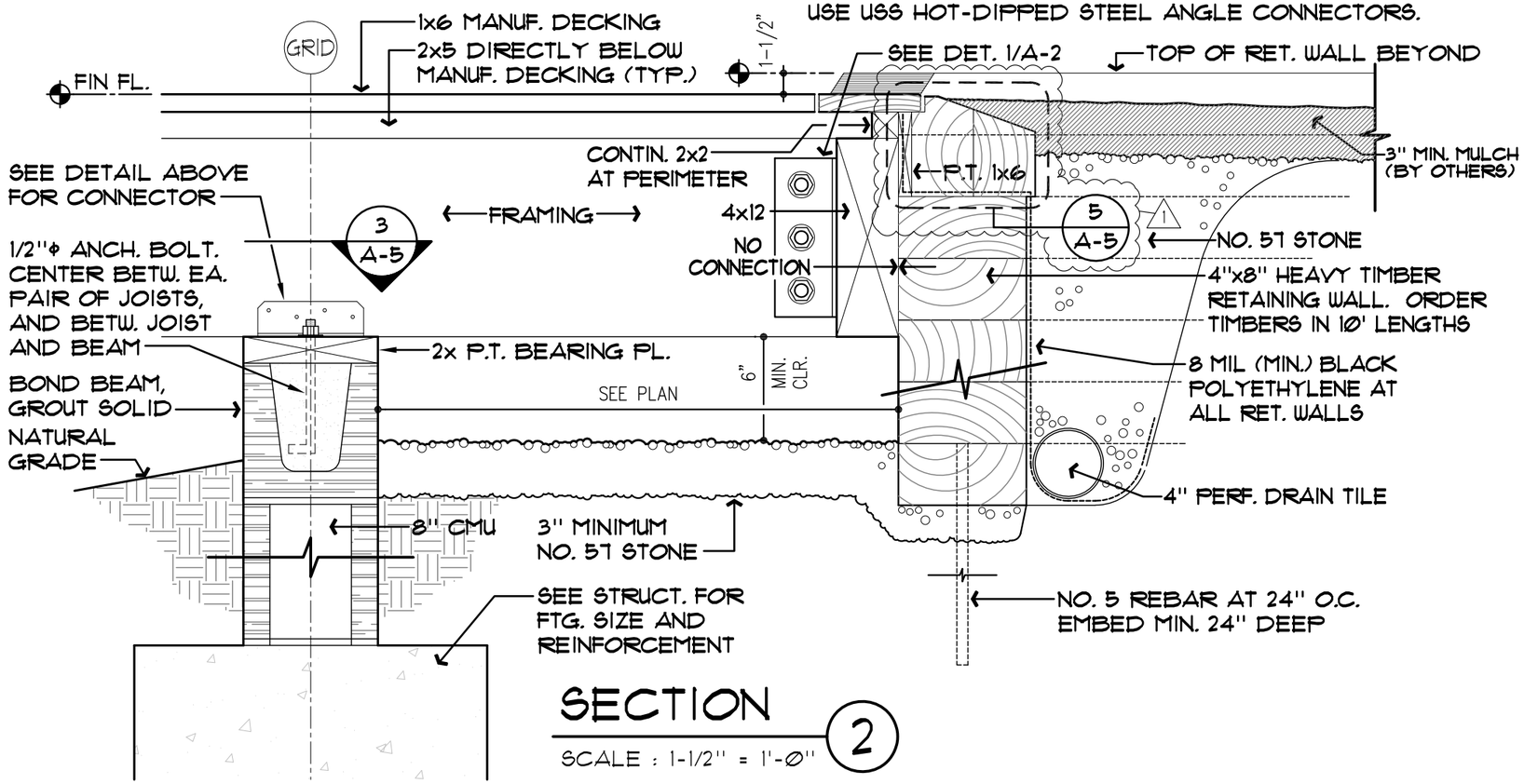

SECTION 2

SCALE : 1-1/2" = 1'-Ø"

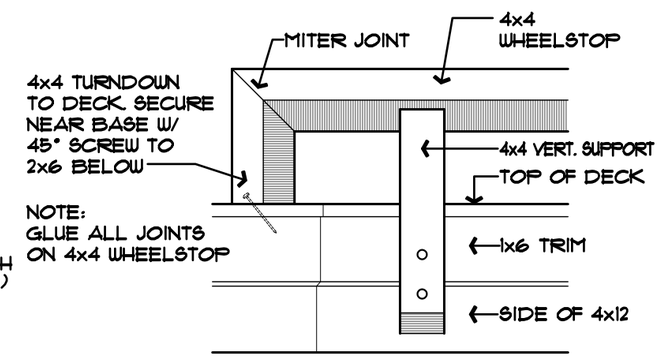

ELEVATION 4

SCALE : 1" = 1'-Ø"

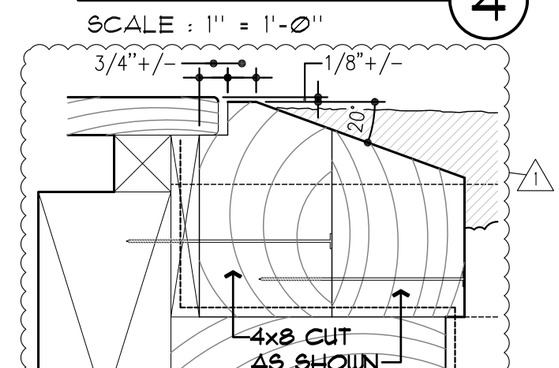

DETAIL 5

SCALE : 3" = 1'-Ø"

Harber Architecture, Inc.
1303 Springfield Hwy, Goodlettsville, TN 37072
Phone: 615-497-5043 Email: normharber@gmail.com

ISSUE DATE : 5/4/18

REVISIONS : 1 7/29/19

LAKE TRAIL BRIDGE 5
RADNOR LAKE STATE NATURAL AREA
NASHVILLE, DAVIDSON COUNTY, TENNESSEE

SHEET NUMBER
A-5

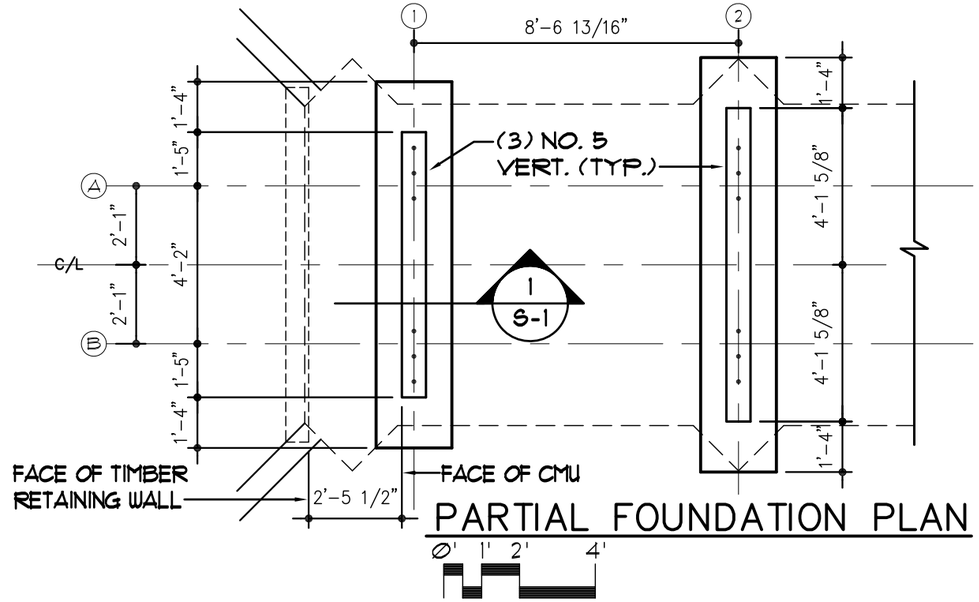

PARTIAL FOUNDATION PLAN

Ø' 1' 2' 4'

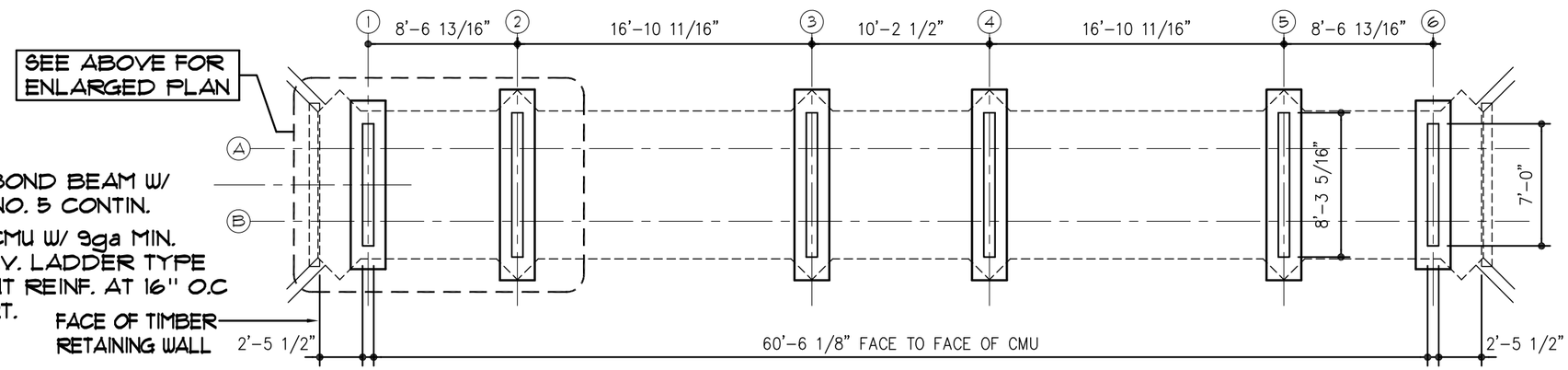

BRIDGE 5 – FOUNDATION PLAN

Ø' 2' 4' 8'

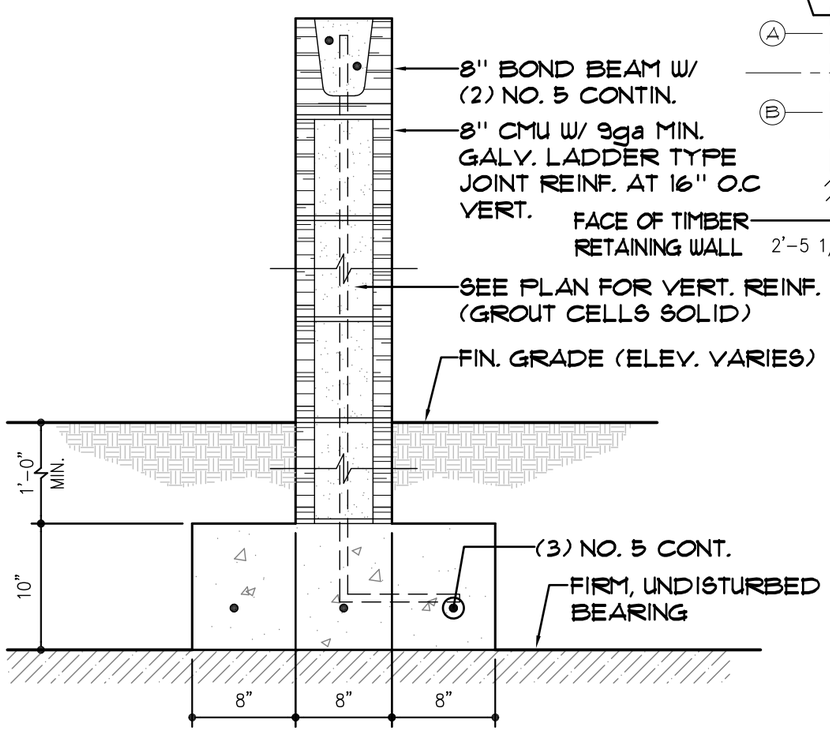

DETAIL 1

SCALE : 1" = 1'-Ø"

STRUCTURAL NOTES

CONCRETE

1. ALL CONCRETE SHALL HAVE A 28-DAY STRENGTH OF 3000 PSI.
2. ALL REINFORCEMENT BARS SHALL BE ASTM A-615, GRADE 60.
3. GROUT FOR FILLING CMU CELLS SHALL BE ASTM C-476 WITH A 28-DAY STRENGTH OF 3000 PSI.

DESIGN LOADS

1. LIVE LOAD = 100 PSF
2. VEHICLE LOAD = TOOLCAT 5600 WITH MAXIMUM WHEEL LOAD = 1800 LBS.

Harber Architecture, Inc.
1303 Springfield Hwy, Goodlettsville, TN 37072
Phone: 615-497-5043 Email: normharber@gmail.com

ISSUE DATE: 5/4/18

REVISIONS: 1 7/29/19

LAKE TRAIL BRIDGE 3
RADNOR LAKE STATE NATURAL AREA
NASHVILLE, DAVIDSON COUNTY, TENNESSEE

SHEET NUMBER
S-1